MA417 (cn_en)
安装说明

CombiTac direqt

目录

安全须知.....2
材料概述.....4
工具准备.....5
外壳安装.....7
线缆准备.....9
压接.....10
支撑块安装.....13
触子安装.....15
装配 LMFB.....18
检查.....19
拆卸支撑块/触子.....20
压缩空气耦合器.....21
编号.....22
外壳尺寸1到6.....23
密封圈更换.....23
底座外壳安装.....24
耦合器外壳安装.....25
面板安装.....26
注意.....27 – 28

MA417 (cn_en)
Assembly instructions

CombiTac direqt

Content

Safety Instructions.....2
Material overview.....4
Tools required.....5
Mounting information for housings.....7
Cable preparation.....9
Crimping.....10
Inserting carriers in frames.....13
Mounting of contacts.....15
Assembly LMFB.....18
Inspection.....19
Removing carriers/contacts.....20
Compressed-air couplers.....21
Coding.....22
Housing sizes 1 to 6.....23
Replacement seals.....23
Installing in surface mount housing.....24
Installing in housing coupler hood.....25
Panel mounting.....26
Notes.....27 – 28

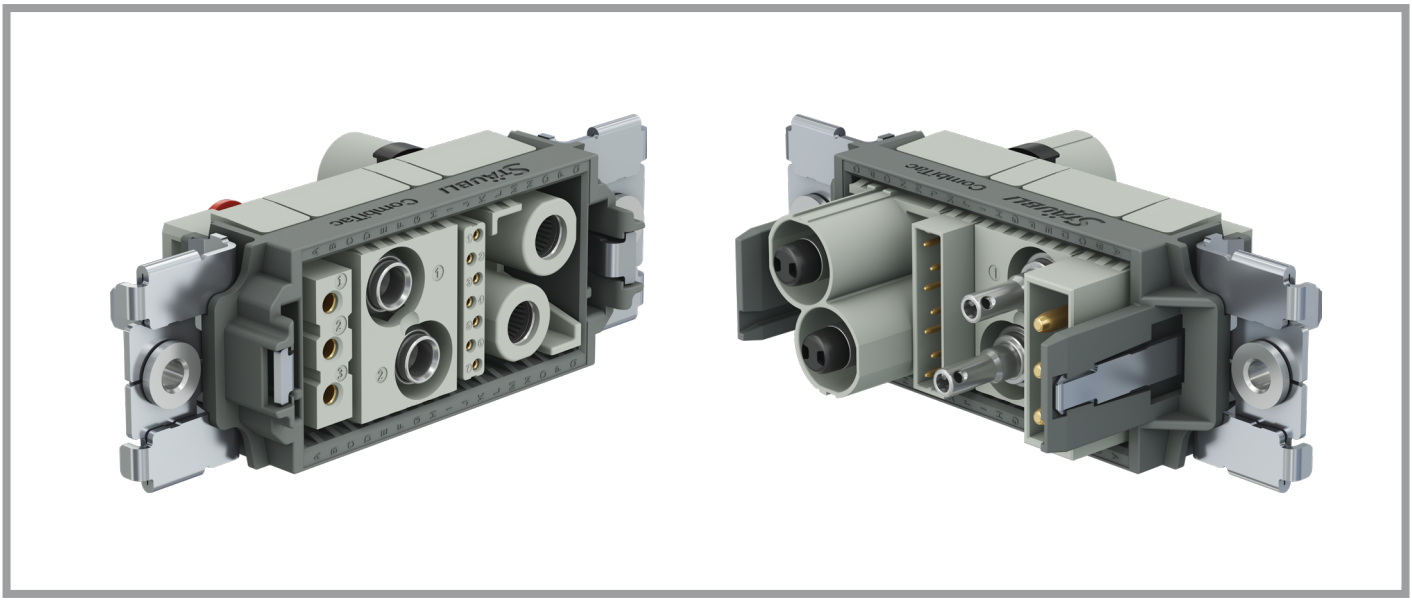

安全须知

仅可使用 Stäubli 指定的组件和工具。自行装配时，切勿背离本手册所述的制备及装配说明，否则 Stäubli 无法保证产品安全性或性能达到官方技术参数。请勿以任何方式修改产品。

可与 Stäubli 元件插合的非 Stäubli 原厂制造的连接器，在某些情况下，某些制造商甚至将其描述为“与 Stäubli 兼容”，但该连接器并不符合长期稳定安全的电连接要求，而且出于安全考虑，不得与 Stäubli 元件插合在一起。因此，Stäubli 对因此类连接器（即未经 Stäubli 批准）与 Stäubli 元件插合而造成的任何损失不承担任何责任。

如您未遵守上述警告，则 Stäubli Electrical Connectors (Stäubli) 不承担任何责任。

IEC 60417-6182
安装需电气专业知识

产品可由具备电气技能或受过此方面指导的人员依照适用的安全法规进行装配或安装。

IEC 60417-6042
注意电击风险

请在断电状态下工作
操作电气装置时，请遵守五项安全规定。
各电气装置确定后，应按照规定顺序执行以下五项基本要求（除非另有必要理由）：

- 完全分离；
- 确保不会重新连接；
- 确认无工作电压；
- 进行接地和短路；
- 针对临近带电部件提供防护。

任何从事此工作活动的人员均应具备电气技能或受过此方面指导，或者由同等能力的人员监督。
来源：EN 50110-1:2013

最终应用时，还应检查电击防护。

IEC 60417-6070
在负载下请勿断开

仅当额定电压不超过 AC 1000 V /DC 1500 V 时，连接器才可能在带电压的状态下断开和插合。
当额定电压超过 AC 1000 V/DC 1500 V 时，仅在连接器插合状态下方可带电，且不允许在负载下进行断开和插合动作。这也适用于在单一型号中同时配置电连接模块与气体和液体模块的情况。

Safety instructions

Use only the components and tools specified by Stäubli. In case of self-assembly, do not deviate from the preparation and assembly instructions as stated herein, otherwise Stäubli cannot give any guarantee as to safety or conformity with the technical data. Do not modify the product in any way.

Connectors not originally manufactured by Stäubli which can be mated with Stäubli elements and in some cases are even described as ”Stäubli-compatible” by certain manufacturers do not conform to the requirements for safe electrical connection with long-term stability, and for safety reasons must not be plugged together with Stäubli elements. Stäubli therefore does not accept any liability for any damages resulting from mating such connectors (i.e. lacking Stäubli approval) with Stäubli elements.

Stäubli Electrical Connectors (Stäubli) does not accept any liability in the event of failure to observe these warnings.

Installation, electrotechnical expertise

The products may be assembled and installed by electrically skilled or instructed persons duly observing all applicable safety regulations.

Caution, risk of electric shock

Work in a de-energized state
Follow the five safety rules, when working on electrical installations.
After the respective electrical installations have been identified, the following five essential requirements shall be undertaken in the specified order unless there are essential reasons for doing otherwise:

- disconnect completely;
- secure against re-connection;
- verify absence of operating voltage;
- carry out grounding and short-circuiting;
- provide protection against adjacent live parts.

Any person engaged in this work activity shall be electrically skilled or instructed, or shall be supervised by such a person.
Source: EN 50110-1:2013

Protection against electric shock shall be checked in the end-use applications too.

Do not disconnect under load

Connecting and disconnecting when live is only permitted if the rated voltage does not exceed AC 1000 V/DC 1500 V.
For rated voltages over AC 1000 V/DC 1500 V, the voltage must only be applied in mated condition, disconnecting under load or connecting when live is not permitted. This also applies for electrical connections in close proximity to fluid and gas connections.

安全须知	Safety instructions
ISO 7000-0434B **注意**	**Caution**
每次使用连接器前，需提前检查外部是否有缺陷(尤其是绝缘层)如有安全疑虑，必须咨询专业人员或更换连接器。	Each time the connector is used, it should previously be inspected for external defects (particularly the insulation). If there are any safety concerns, an electrically skilled person must be consulted or the connector must be replaced.
IP防护等级依据 IEC 60529:2013	IP protection according to 60529:2013
未插合的连接器必须防潮防尘。被污染的公母连接器不应插合使用。	Unmated plug connectors must be protected from moisture and dirt. The male and female parts must not be plugged together when soiled.
ISO 7000-0421 **检查**	**Examine; Check**
告知检查	To indicate examination or checking
产品使用说明或技巧	**Useful hint or tip**
欲了解更多技术参数，请参阅产品目录。	For further technical data please see the product catalog.

材料概述

Material overview

插座侧
Socket side

插针一侧
Pin side

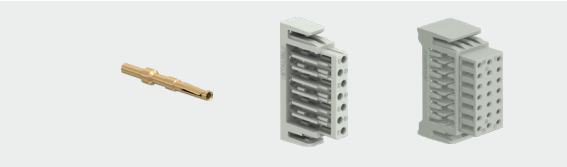

1 mm

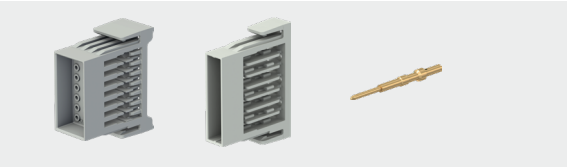

1.5 mm

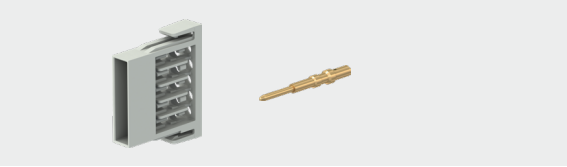

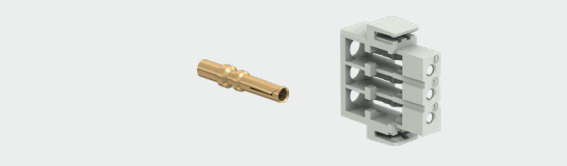

3 mm

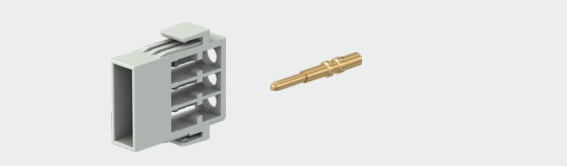

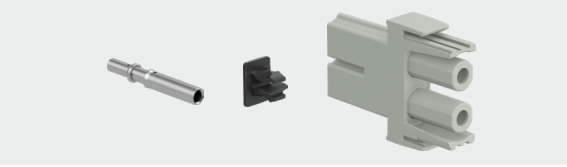

4 mm

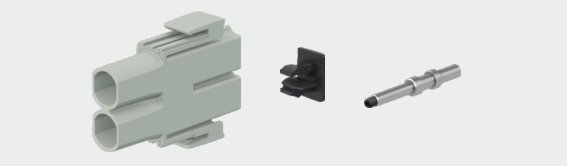

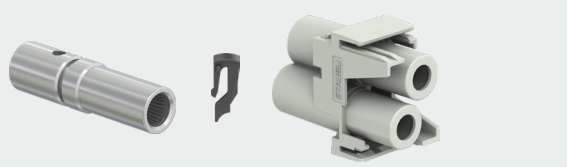

7 mm

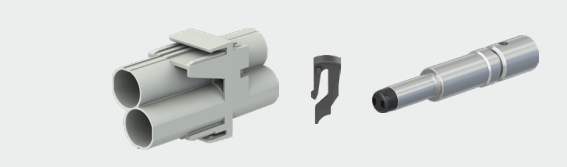

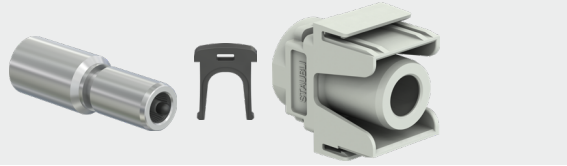

10 mm

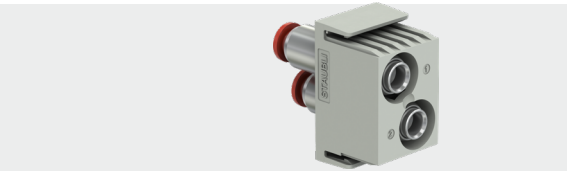

气体
Pneumatic

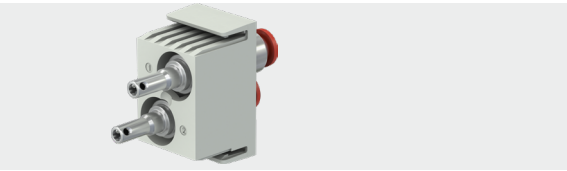

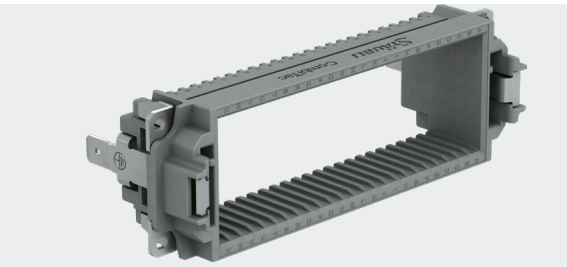

框架
Frames

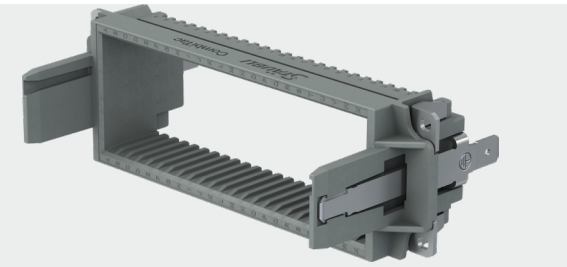

垫片
Spacers

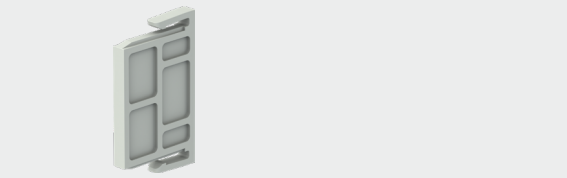

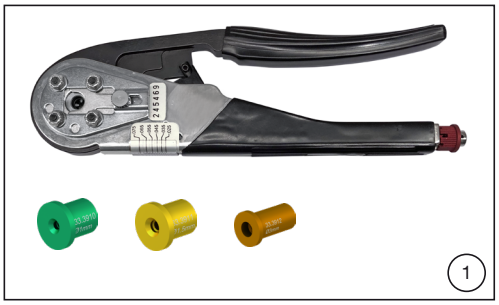

工具准备

(图 1)
压接钳 CTD-M-CZ
订货号:33.3900
和定位块(表1)

注意事项:
操作说明 MA419,
www.staubli.com/electrical

Tools required

(ill. 1)
Crimping pliers CTD-M-CZ
Order No.: 33.3900
and locators (Tab. 1)

Note:
Operating instructions MA419,
www.staubli.com/electrical

Tab. 1

型号 Type	订货号 Order No.	导体截面积 Conductor cross section (mm²)	AWG	说明 Description
MES-CZ-CTD1	**33.3910**	0.14/0.25/0.5/0.75	26/24/20/18	定位块/Locator
MES-CZ-CTD1,5	**33.3911**	0.75/1/1.5	18/18/16	定位块/Locator
MES-CZ-CTD3	**33.3912**	2.5/4	14/12	定位块/Locator

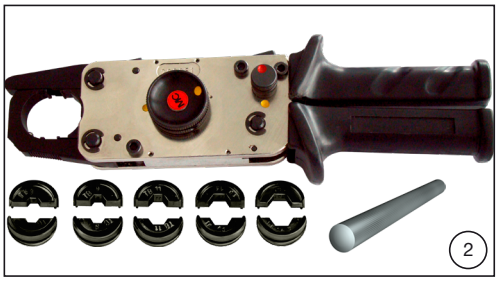

(图 2)
压接钳 M-PZ13
订货号:18.3700
和压接模具(表2)

注意事项:
操作说明 MA224,
www.staubli.com/electrical

(ill. 2)
Crimping pliers M-PZ13
Order No.: 18.3700
and crimping dies (Tab. 2)

Note:
Operating instructions MA224,
www.staubli.com/electrical

Tab. 2

型号 Type	订货号 Order No.	导体截面积 Conductor cross section (mm²)	AWG	说明 Description
MES-PZ-TB8/10	**18.3702**	10	8	压接模具/rimping die
MES-PZ-TB9/16	**18.3703**	16	6	压接模具/Crimping die
MES-PZ-TB11/25	**18.3704**	25	4	压接模具/Crimping die
MPS-PZ13	**18.3707**	-	-	测试嵌块/Test insert
MALU-PZ13	**18.3708**	-	-	圆形测试杆/ ound test rod

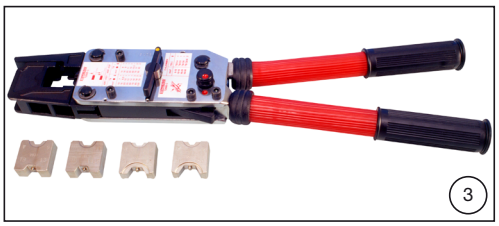

(图 3)
压接钳 M-PZ-T2600
订货号:18.3710
和压接模具(表3)

注意事项:
操作说明 MA226,
www.staubli.com/electrical

(ill. 3)
Crimping pliers M-PZ-T2600
Order No.: 18.3710
and crimping dies (Tab. 3)

Note:
Operating instructions MA226,
www.staubli.com/electrical

Tab. 3

型号 Type	订货号 Order No.	导体截面积 Conductor cross section (mm²)	AWG	说明 Description
TB8-17	**18.3711**	10 + 70	8 + 2/0	压接模具/Crimping die
TB9-13	**18.3712**	16 + 35	6 + 2	压接模具/Crimping die
TB11-14,5	**18.3713**	25 + 50	4 + 1/0	压接模具/Crimping die
TB7-20	**18.3714**	95	4/0	压接模具/Crimping die

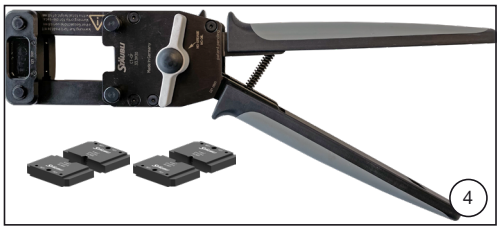

(图 4)
压接钳 CT-CP
订货号:33.3930
和压接模具(表4)

(ill. 4)
Crimping pliers CT-CP
Order No.: 33.3930
and crimping dies (Tab. 4)

注意事项:
操作说明 MA420,
www.staubli.com/electrical

Note:
Operating instructions MA420,
www.staubli.com/electrical

Tab. 4

型号 Type	订货号 Order No.	导体截面积 Conductor cross section (mm^2)	AWG	说明 Description
CT-I-CP6	**33.3932**	6	10	压接模具/Crimping die
CT-I-CP4	**33.3931**	**4**	12	

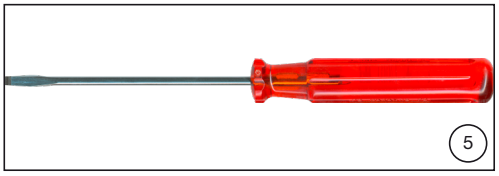

(图 5)
螺丝刀
尺寸2和3

(ill. 5)
Screwdriver
Size 2 and 3

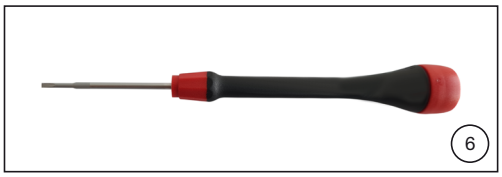

(图 6)
精细螺丝刀
(仅适用于1毫米、21针的触子支撑块)

(ill. 6)
Fine screwdriver
(only for 1 mm, 21-pin contact carrier)

(图 7)
热风机

(ill. 7)
Hot air blower

外壳安装
钻孔平面图

Mounting information for housings
Drilling plans

底座外壳:
for surface mount housing:

尺寸公差:± 0.1 mm
Dimensional tolerances: ± 0.1 mm

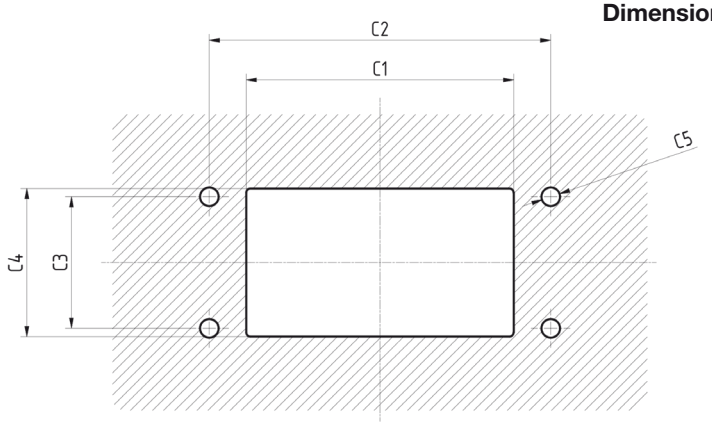

8

基座外壳:
for pedestal mount housing:

尺寸公差:± 0.1 mm
Dimensional tolerances: ± 0.1 mm

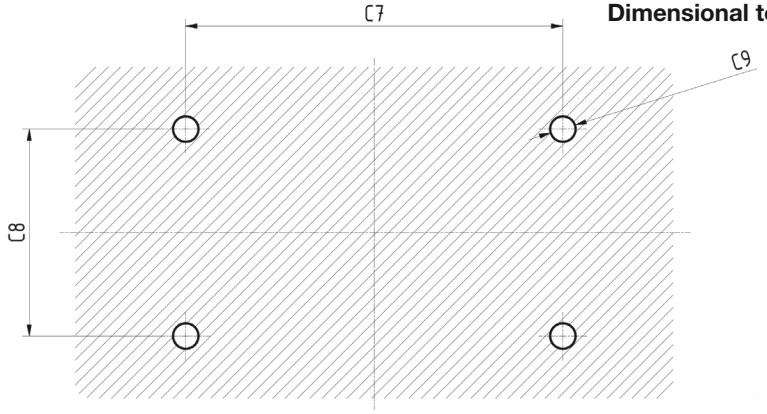

9

底座和基座外壳侧视图(适用于螺钉选型)
Surface and pedestal mount housings side view (for selection of screws)

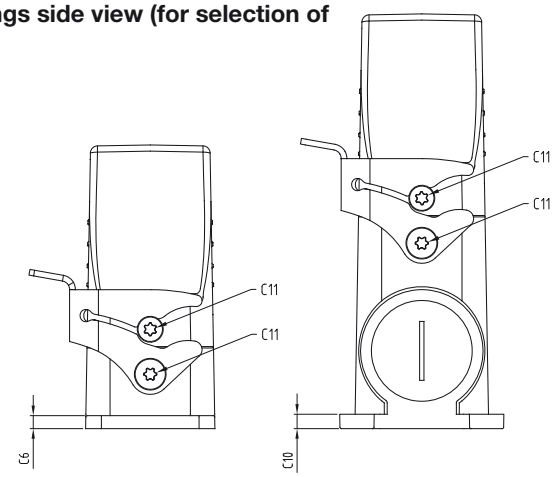

尺寸2、3和4
Size 2, 3 and 4:

C11 = TORX X25
拧紧扭矩:最大 2 N m
Tightening torque: max 2 N m

10

(图 8 – 10)
尺寸1到6外壳的开孔尺寸参见第 8 页的表 5。

(ill. 8 – 10)
Cutout dimensions according to Tab. 5, page 8 for housing sizes 1 to 6.

开孔尺寸
Tab. 5

Dimensions table

型号 Type		尺寸 1 Size 1	尺寸 2 Size 2	尺寸 3 Size 3	尺寸 4 Size 4	尺寸 5 Size 5	尺寸 6 Size 6
CT-SM...IP65	C1 (mm)	52	67	87	113	88	110
	C2 (mm)	70	83	103	130	110	148
	C3 (mm)	32	32	32	32	65	70
	C4 (mm)	36	37	37	37	70.6	80.5
	C5 (mm)	M4/Ø 4,5	M4/Ø 4,5	M4/Ø 4,5	M4/Ø 4,5	M5/Ø 5,5	M6/Ø 6,5
	C6 (mm)	6.5	6	6	6	9	12
	拧紧扭矩 Tightening torque C5 (N m)	3	3	3	3	5	9
CT-PM...IP65	C7 (mm)	70	82	105	132	112	111
	C8 (mm)	45	45	45	45	67	106
	C9 (mm)	M5/Ø 5,5	M5/Ø 5,5	M5/Ø 5,5	M5/Ø 5,5	M5/Ø 5,5	M6/Ø 6,5
	C10 (mm)	5	5	5	5	5	10
	拧紧扭矩 Tightening torque C9 (N m)	5	5	5	5	5	9
CT-SM...IP68	C1 (mm)	48	60	82	108	-	-
	C2 (mm)	70	83	103	130	-	-
	C3 (mm)	32	32	32	32	-	-
	C4 (mm)	35	35	35	35	-	-
	C5 (mm)	M6/Ø 6,5	M6/Ø 6,5	M6/Ø 6,5	M6/Ø 6,5	-	-
	C6 (mm)	6	6	6	6	-	-
	拧紧扭矩 Tightening torque C5 (N m)	9	9	9	9	-	-
CT-PM...IP68	C7 (mm)	127	140	160	187	-	-
	C8 (mm)	60	60	60	60	-	-
	C9 (mm)	M8/Ø 8,5	M8/Ø 8,5	M8/Ø 8,5	M8/Ø 8,5	-	-
	C10 (mm)	8	8	8	8	-	-
	拧紧扭矩 Tightening torque C9 (N m)	9	9	9	9	-	-
CT-SM...TP	C1 (mm)	52	65	86	112	-	-
	C2 (mm)	70	83	103	130	-	-
	C3 (mm)	32	32	32	32	-	-
	C4 (mm)	35	35	35	35	-	-
	C5 (mm)	M4/Ø 4,5	M4/Ø 4,5	M4/Ø 4,5	M4/Ø 4,5	-	-
	C6 (mm)	5	5	5	5	-	-
	拧紧扭矩 Tightening torque C5 (N m)	1.2	1.2	1.2	1.2	-	-
CT-PM...TP	C7 (mm)	70	82	105	132	-	-
	C8 (mm)	45	45	45	45	-	-
	C9 (mm)	M5/Ø 5,5	M5/Ø 5,5	M5/Ø 5,5	M5/Ø 5,5	-	-
	C10 (mm)	6	6	6	6	-	-
	拧紧扭矩 Tightening torque C9 (N m)	1.2	1.2	1.2	1.2	-	-

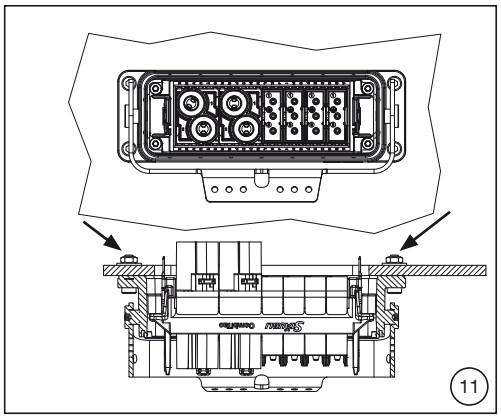

(图 11)
安装材料[1)]
圆头螺钉的长度取决于面板的厚度和外壳框架(C6, C10)。

[1)] 交货中不含此零件

(ill. 11)
Mounting material[1)]
The length of the cheese head screws depends on the panel thickness and housing frame (C6, C10).

[1)] not included in scope of delivery

线缆准备

注意事项：
剥线长度 **L** 取决于 CombiTac 的配置，并且要足够长，才能确保触子在安装到支撑块中时，不会受到电缆拉力（电缆固定夹）。

Cable preparation

Note:
Stripping length **L** depends on the CombiTac configuration and must be sufficient to ensure tensile forces are not applied to the contacts when assembled in carriers (cable strain relief).

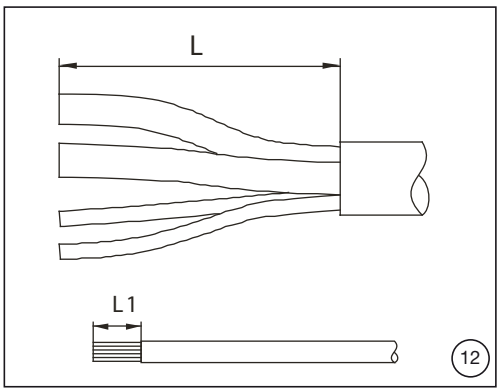

（图 12）
将配件例如格兰头）穿过线缆。
安装在外壳中的线缆尺寸 L 必须根据具体情况进行调整。单芯线剥线长度 **L1** 参见表6。

(ill. 12)
Place accessories (e.g. cable gland) on the cable optionally.
Stripping length **L** of the lead for mounting in housing has to be adapted from case to case. Stripping length **L1** for single conductors, see Tab. 6.

Tab. 6

触子 Contacts	导体横截面 Conductor cross section		压接钳 Crimping pliers						剥线长度 Stripping length	检查尺寸 Check dimension
mm	mm²	AWG	CTD-M-CZ			CT-CP	M-PZ13	M-PZ-T2600		
			选择器 Selector AWG-N°	选择器 Selector SEL-N°	定位块 Locator	压接模具 Crimping die	压接模具 Crimping die	压接模具 Crimping die	L1	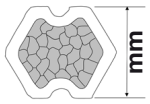
1	0.14	26	26	1	MES-CZ-CTD1				5	
	0.25	24	24	2					5	
	0.5	20	20	4					5	
	0.75	18	18	5					5	
1,5	0.75	18	18	5	MES-CZ-CTD1,5				5	
	1	18	18	5					5	
	1.5	16	16	6					5	
3	2.5	14	14	7	MES-CZ-CTD3				8	
	4	12	12	8					8	
4	4	8				CT-I-CP4			9	3.9
	6	10				CT-I-CP6			9	4.3
	10	8					MES-PZ-TB8/10	TB8/17	11	6.3
7	6	10				CT-I-CP6			9	4.3
	10	8					MES-PZ-TB8/10	TB8-17	11	6.3
	16	6					MES-PZ-TB9/16	TB9-13	11	7.3
	25	4					MES-PZ-TB11/25	-	12	8.8
10	35	2						TB9-13	15	10.2
	50	1/0						TB11-14,5	23	11.4
	70	2/0						TB8-17	26	13.4
	95	4/0						TB7-20	28	15.8

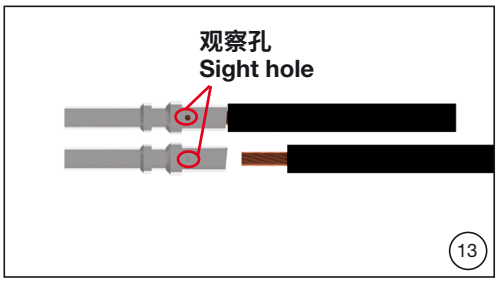

压接

(图 13)
将导线尽可能深地插入压接套。

压接钳和压接模具参见第 9 页的表 6。

(Ø 1, 1.5, 3 mm 触子)
注意事项:
压接前后，必须能在观察孔中看到导线。

Crimping

(ill. 13)
Insert wire into the crimping sleeve as far as it will go.

Crimping pliers and crimping dies according to Tab. 6, page 9.

(Ø 1, 1.5, 3 mm contacts)
Note:
Wire must be visible in the sight hole before and after crimping.

第一次压接
First crimping

第二次压接
Second crimping

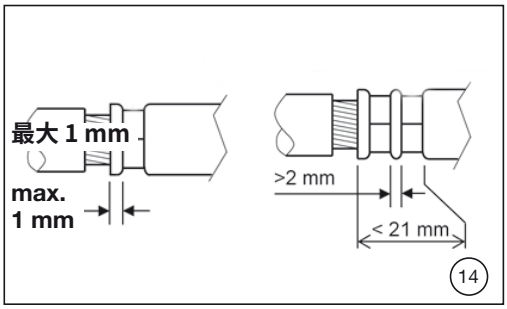

(图 14)
观察压接区域！

在导体截面积为 70 mm² 或 95 mm² 的压接端口中，必须并排进行两次压接。

(ill. 14)
Observe crimping area!

In crimp terminations with a conductor cross section of 70 mm² or 95 mm², two crimps must be performed side by side.

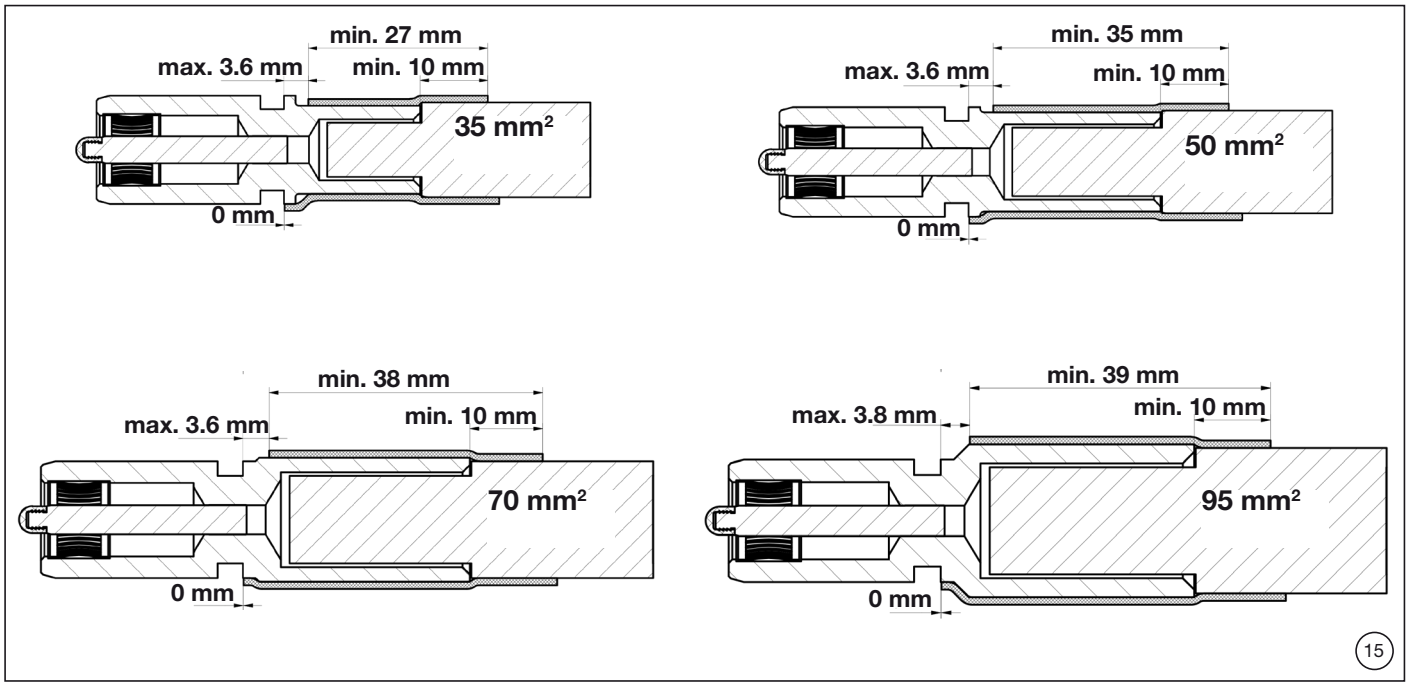

⚠ 注意 (图 15)
(Ø 10 mm 触子):
压接完成后，请用热缩管完全包裹压接区域。

⚠ Attention (ill. 15)
(Ø 10 mm contacts):
Once the crimping process has been completed, use heat shrink tubes to ensure crimping area is completely covered.

装配

注意事项：
所有框架和支撑块均已编号，以确保插入极性正确。将支撑块强行插入错误或极性错误的框架均有可能损坏支撑块。

Assembly

Note:
All frames and carriers are coded to ensure correct polarity insertion. Forcing a carrier into the wrong frame or inserting a carrier in a frame with the wrong polarity may damage the carrier.

框架

Frames

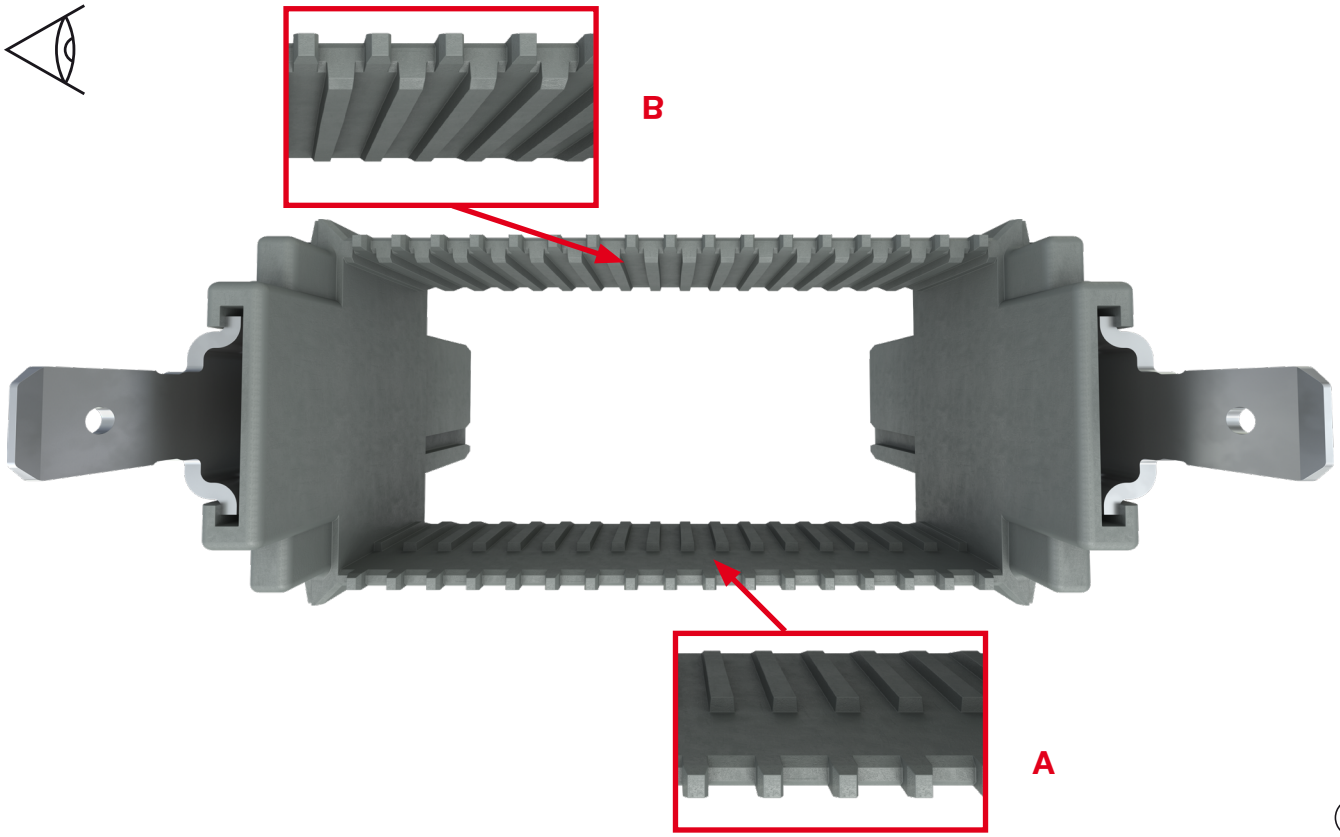

16

观察（图 16）：
- 框架编号**A**区域含非连续性沟槽。
- 框架编号**B**区域含连续性沟槽。

Observation (ill. 16):
- Frame coding **A** has non-continuous grooves.
- Frame coding **B** has continuous grooves.

支撑块

1 mm, 1.5 mm, 3 mm, 4 mm, 7 mm, 10 mm

Carriers

1 mm, 1.5 mm, 3 mm, 4 mm, 7 mm, 10 mm

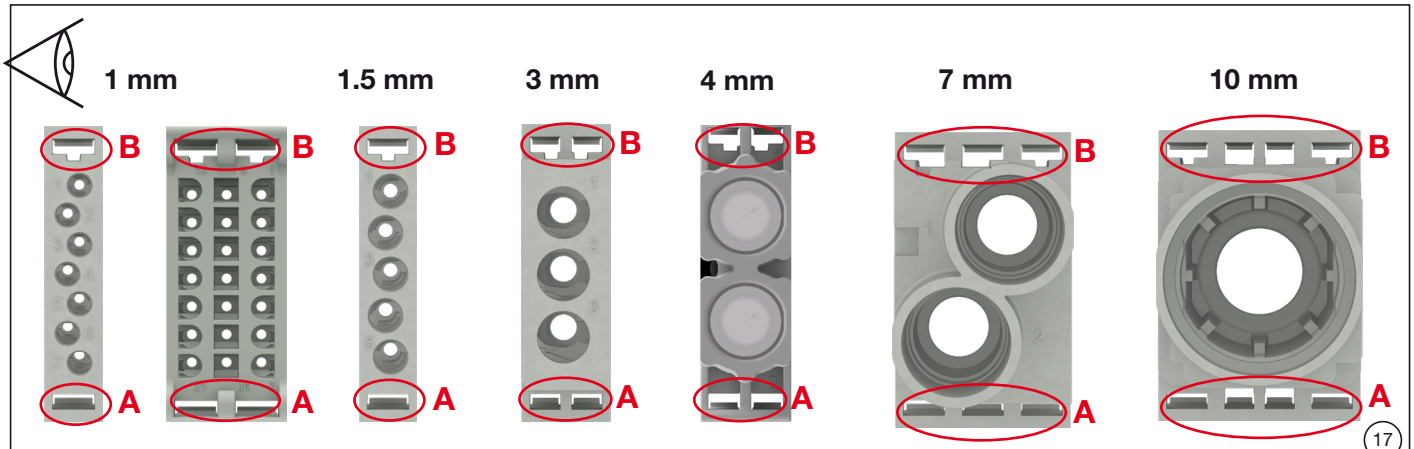

17

观察（图 17）：
- 支撑块编号**A**处是矩形开孔
- 支撑块编号**B**处是 T 型或 L 型开孔

Observation (ill. 17):
- Carrier coding **A** is rectangular
- Carrier coding **B** is T- or L-type

气体

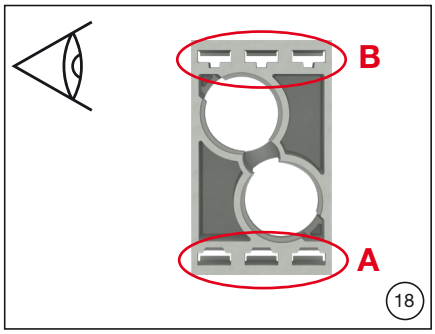

观察 (图 18) :
- 支撑块编号**A**处是梯形开孔
- 支撑块编号**B**处是 T 型开孔

Pneumatic

Observation (ill. 18):
- Carrier coding **A** is trapezoid
- Carrier coding **B** is T-type

将支撑块插入框架

Inserting carriers in frames

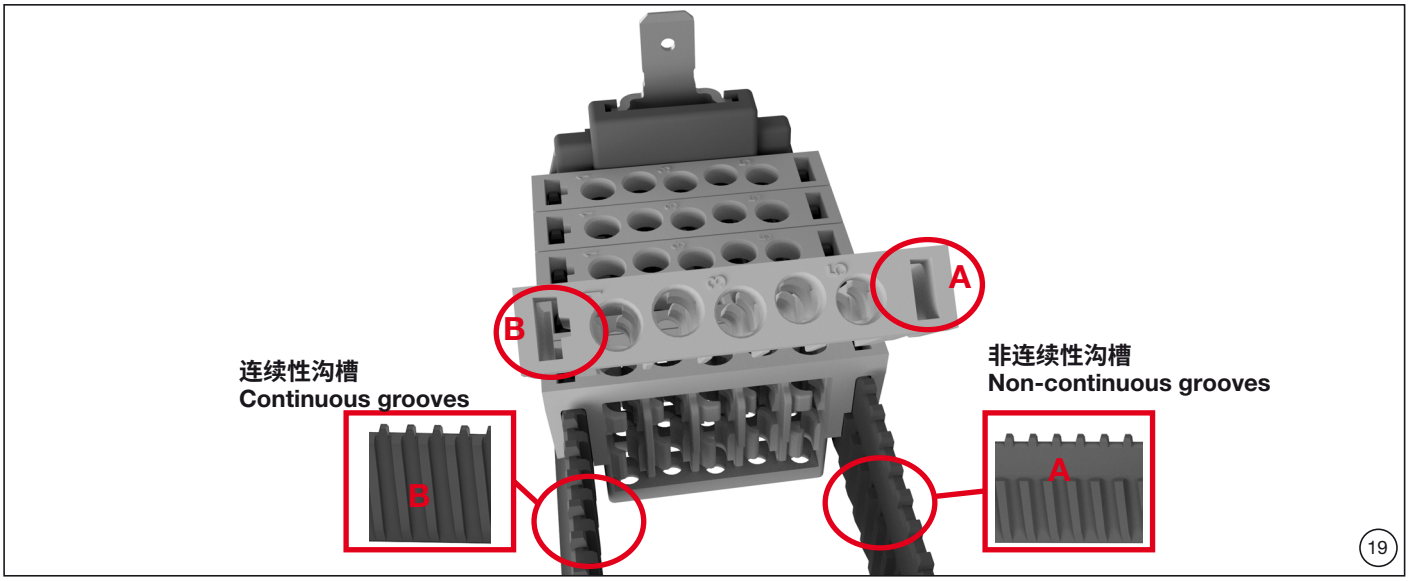

注意 (图 19) :
按照正确的极性，将支撑块手动插入相应的凹凸框架。
应将极性 (A) 支撑块一侧 (矩形或长 T 型开孔) 插入非连续性沟槽 (A) 框架一侧。

Attention (ill. 19):
Manually insert carriers in the corresponding male or female frames with the correct polarity.
Polarity (A) carrier side (rectangular or long-T type cutouts) should be inserted in the non-continuous groove (A) frame side.

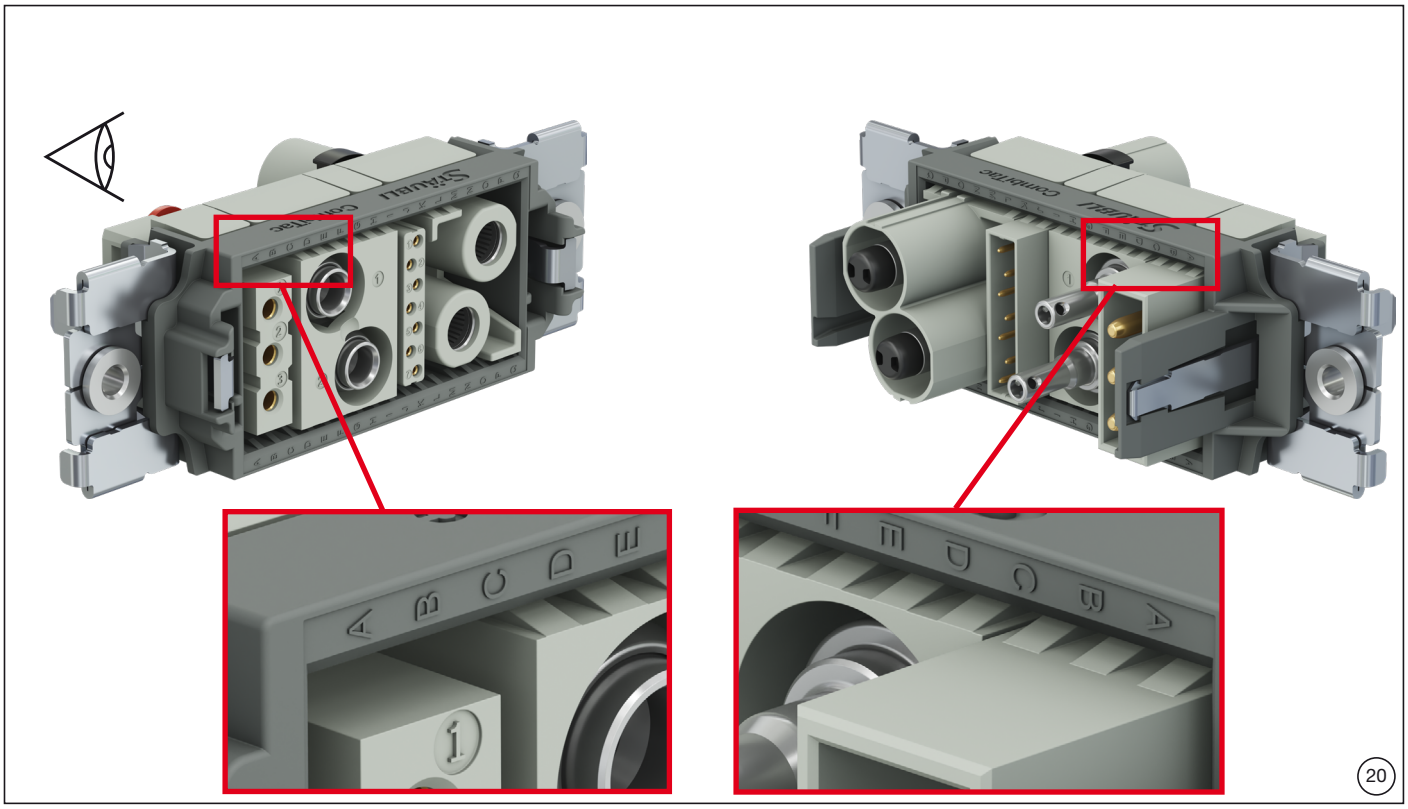

观察（图20）：
公母支撑块必须分别插入编号对应一致的框架位置。

Observation (ill. 20):
Carriers must be inserted in the correct identical lettered pin and socket side frames.

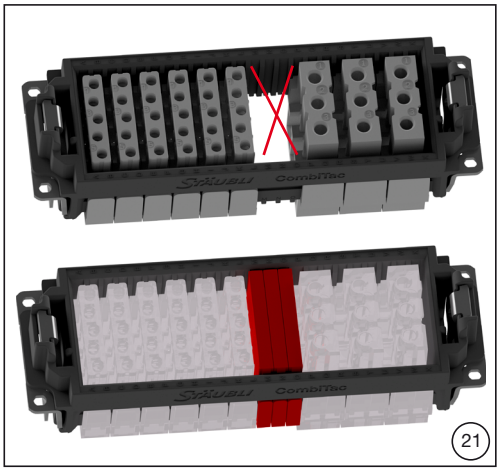

（图21）
支撑块之间不允许有空隙。
如需填充空隙，请用垫片CTP-DIP3,5。
订货号：35.4135。

(ill. 21)
There must be no empty frame slots between carriers.
If any, fill up with spacers CTD-DIP3,5.
Order No. 35.4135.

安装触子

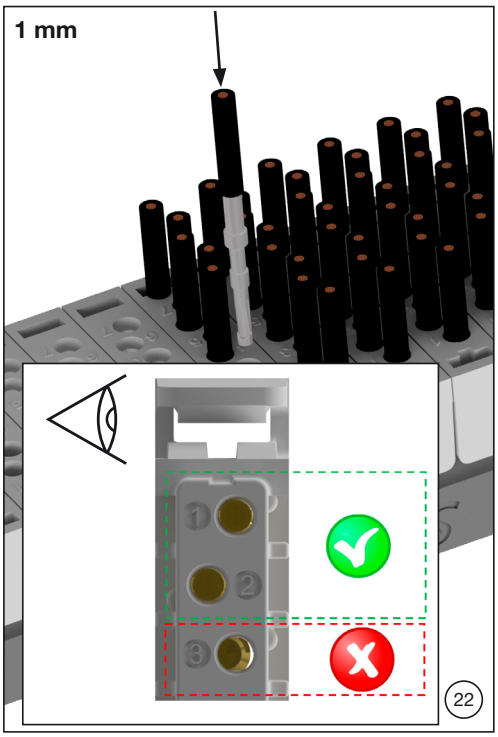

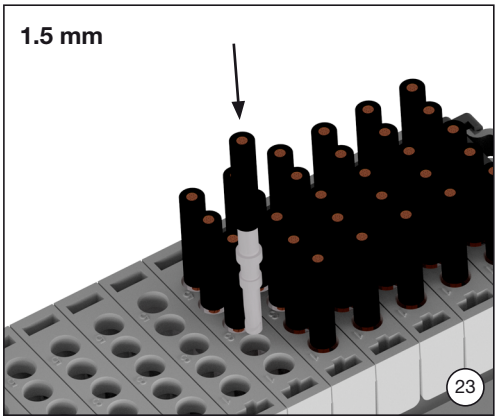

Mounting of contacts

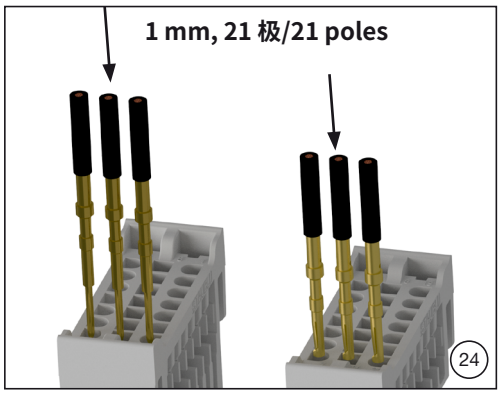

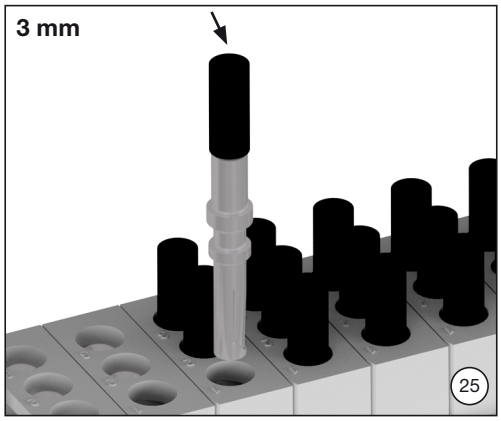

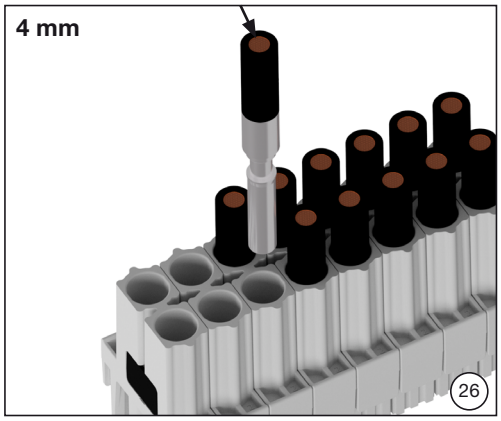

(图 22 – 26)
将已压接线缆的触子手动插入相应的支撑块插槽，直至听到“咔哒”声，即表示其牢固到位。

注意事项：
为保证触子能够牢固地安装在支撑块内，触子拆卸和插入请勿超过5次。

观察：
请注意在将已压接线缆的1mm插座触子插入支撑块时，
-触子应当被笔直插入，任何有角度的插入将会损坏触子。
-在插入触子时，请同时在支撑块正面做目视检查以确保触子的正确插入。

(ill. 22 – 26)
Manually insert crimped contacts in the corresponding carrier slot until they click securely into position.

Note:
To guarantee contacts are securely held inside the carrier, do not remove and re-insert contacts more than 5 times.

Observation:
Please pay attention when inserting the crimped 1 mm socket contacts into the contact carrier.
- The contacts must be inserted straight. Angular insertion of contacts inside the carrier may damage the contacts.
- Following insertion, please make a visual check at the front mating side of the carriers to ensure contacts have been inserted correctly.

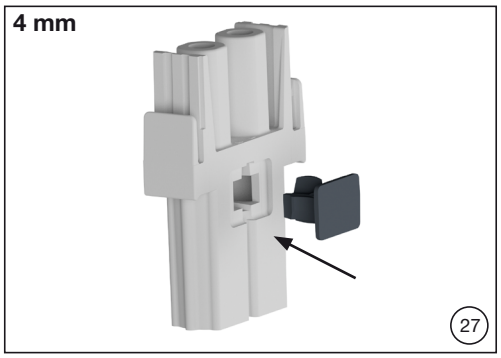

(图 27)
Ø 4 mm 触子：
如图所示插入固定夹，然后插入已压接的触子（听到咔哒声）。

(ill. 27)
Ø 4 mm contacts:
Insert the clip as shown in the picture and then insert the crimped contacts (audible click).

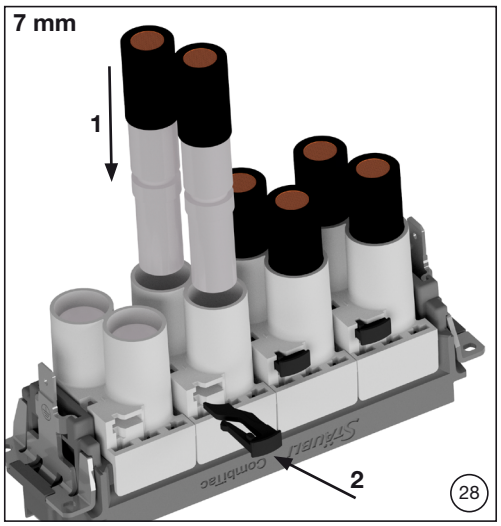

(图 28)
Ø 7 mm 触子：
将已压接线缆的触子插入相应的支撑块插槽，并用固定夹将其固定（听到“咔哒”声）。

注意事项：
配置7mm触子在侧入线外壳中，必须添加保护墙，以确保IP2X防护。这样可在外壳坠落至坚硬表面时，防止 7 mm 触子被损坏。

(ill. 28)
Ø 7 mm contacts:
Insert crimped contacts into appropriate carrier slot, and secure into position with the retaining clip (audible click).

Note:
To guarantee IP2X protection when using 7 mm contacts in configurations which include a housing with side cable entry, the use of a protective wall is needed. This ensures protection of 7 mm contacts against damage in case housing falls on a hard surface.

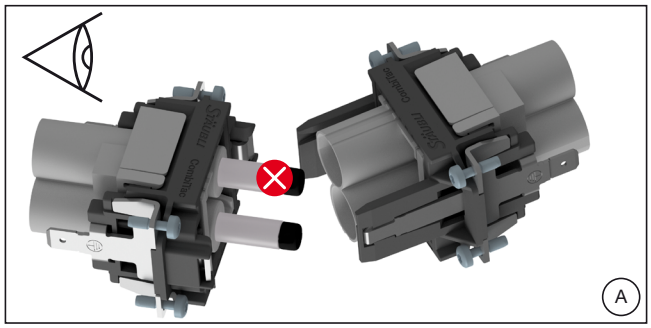

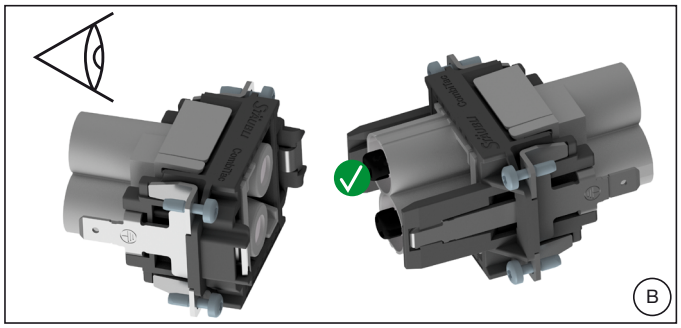

观察（图A和图B）：
检查安装的极性。

Observation (A + B):
Check assembly polarity!

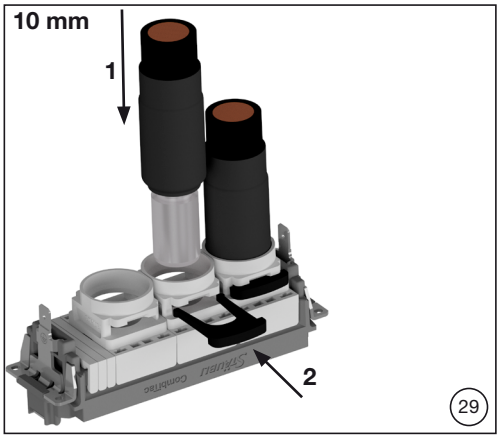

(图 29)
Ø 10 mm 触子：
将已压接触子插入相应的支撑块插槽，并用固定夹将其固定（听到“咔哒”声）。

可将固定夹插入支撑块任意一侧。

(ill. 29)
Ø 10 mm contacts:
Insert crimped contacts into appropriate carrier slot, and secure into position with the retaining clip (audible click).

The retaining clip can be inserted on either side of the carrier.

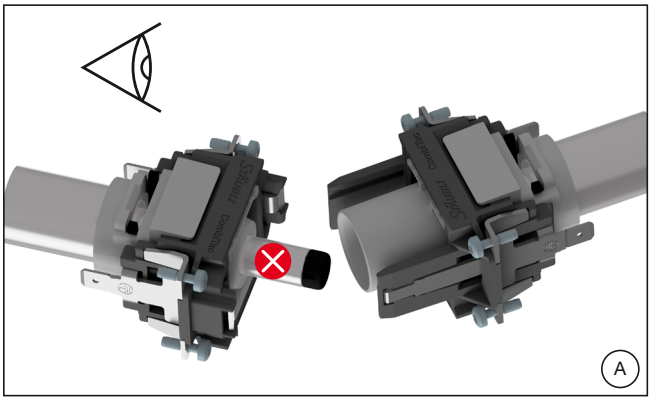

观察（图A和图B）：
检查安装的极性。

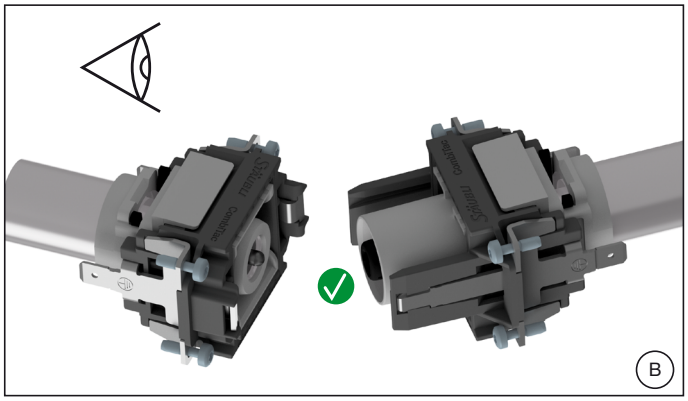

Observation (A + B):
Check assembly polarity!

先断后通 (LMFB) 装配

LMFB assembly

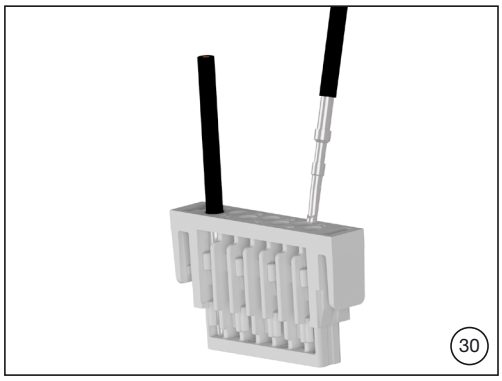

⚠ 注意
先断后通触子在支撑块中的位置非常重要。
两个先断后通触子只能放在边缘插槽 (插槽编号 1 和 7) 中。
若未将先断后通触子放置在正确位置上，导致先断后通无法正常运行。
空位置 (2 至 6) 可装配 1 mm 的信号触子。

⚠ Achtung
The positioning of the LMFB contacts in the contact carrier is very important.
The two LMFB contacts should only be placed in the edge slots (slot number 1 and 7). Failure to place the LMFB contacts in the correct position, will lead to incorrect LMFB functionality.
Empty positions (2 to 6) can be equipped with 1 mm signal contacts.

先断后通模块在 CombiTac 上的定位和布线

Positioning and wiring of LMFB modules on CombiTac

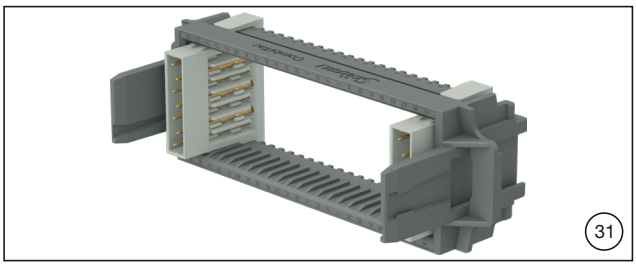

(图31)
1 号尺寸框架需要一个先断后通模块，可以放置在框架的任何位置。
2 - 4 号尺寸框架需要两个先断后通模块，放置在框架的边缘位置。若要安装在 5 - 6 号尺寸外壳中，需要在斜对角上放置先断后通模块，详见图33。
空的支撑块插槽 (2 - 6 号位置) 可与 1 mm 信号触子一起使用。

(ill. 31)
Size 1 frames require one LMFB module, which can be placed in any position in the frame.
Size 2 – 4 frames require two LMFB modules which are positioned at the edge positions of the frame. For mounting in housings size 5 – 6, two diagonal LMFB modules are required, see ill. 33.
Empty carrier slots (position 2 – 6) may be used with 1 mm signal contacts.

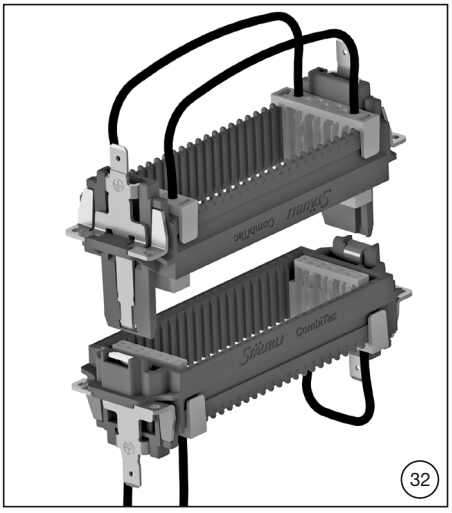

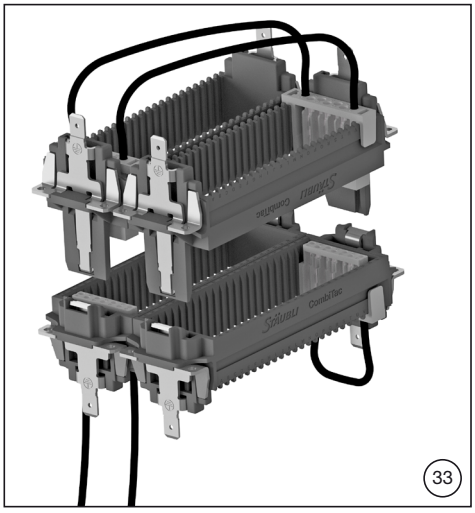

(图32 – 33)
为确保先断后通触子正常运行，这些触子必须如图串联连接。

(ill. 32 – 33)
To ensure correct functionality of LMFB contacts, the contacts must be connected in series as shown.

检查

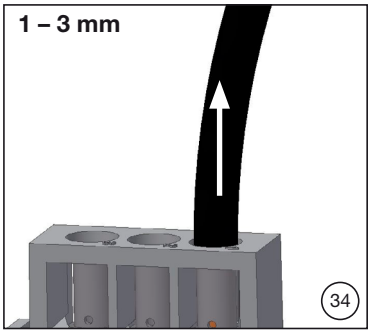

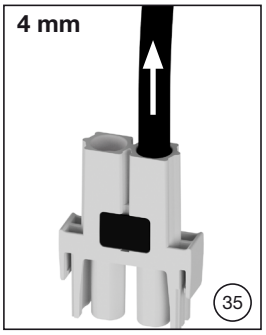

(图 34 – 37)
轻拉电缆以检查触子是否被牢固地插入支撑块。

Inspection

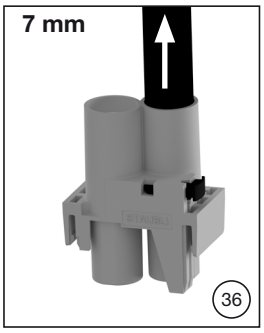

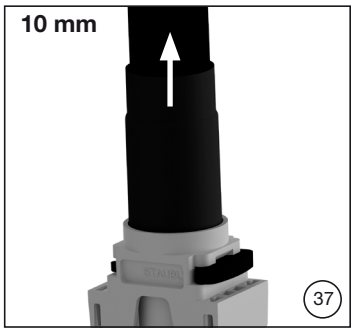

(ill. 34 – 37)
Check that contacts are securely inserted in the carrier by gently pulling the cable.

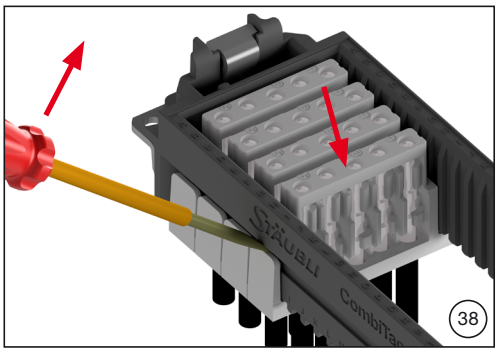

拆卸支撑块

(图 38)
将螺丝刀(3号)轻轻地推入支撑块固定夹下方,同时轻轻地按压支撑块正面。在另一侧重复该过程。

注意事项:
支撑块不宜反复拆卸和插入(不超过 5 次)。

Removing the carriers

(ill. 38)
Gently push the screwdriver (size 3) under the carrier clip and at the same time press the carrier down with light pressure on the mating face. Repeat the process on the opposite side.

Note:
Carriers are not suitable for frequent removal and re-insertion (not more than 5 times).

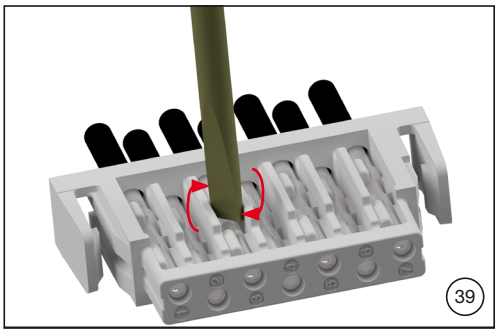

拆卸触子

(图 39)
Ø 1 mm 和 1.5 mm 触子:

- 将螺丝刀尖端(3号)插入两个卡槽之间。
- 轻转螺丝刀以松动触子。
- 拉出电缆以拆下触子。

Removing the contacts

(ill. 39)
Ø 1 mm and 1.5 mm contacts:

- Place screwdriver tip (size 3) between the two holding slots.
- Gently turn the screwdriver to release the contact.
- Pull the cable to remove contact.

直径1毫米, 21极

Ø 1 mm, 21 poles

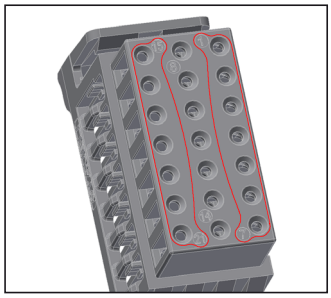

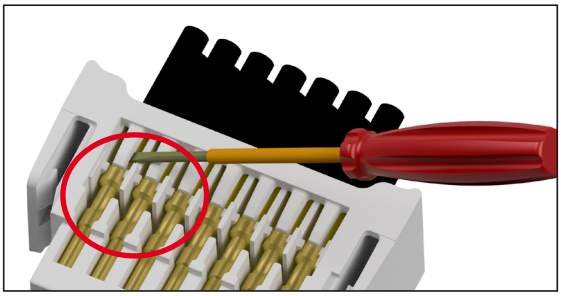

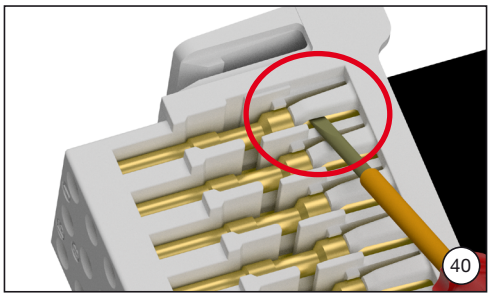

(图 40) 外列(1 至 7 或 15 至 21)

- 小心地将精细螺丝刀滑动插入凸耳下面,并将其略微向上抬起。

注意:
凸耳不能过度变形!

- 同时拉动电缆,移除触子。

(ill. 40) Outer row (1 to 7 or 15 to 21)

- Carefully slide the fine screwdriver under the tab and press it slightly upwards.

Attention:
Tab must not be deformed excessively!

- Pull the cable at the same time to remove the contact.

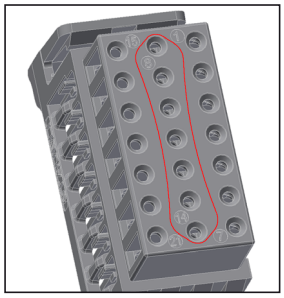

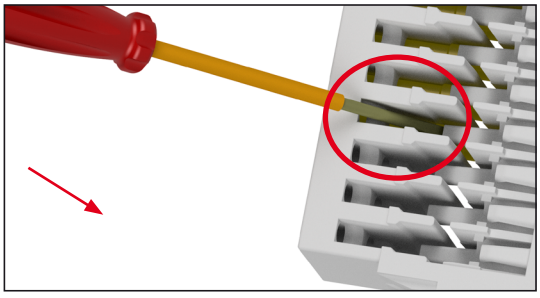

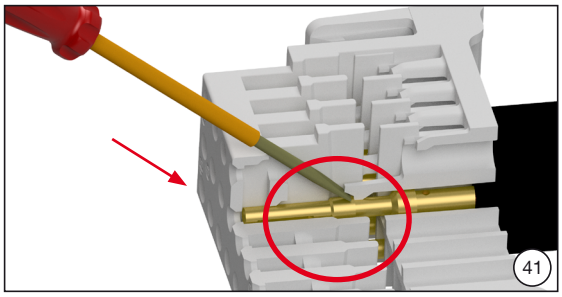

(图 41) 中列(8 至 14)

注意:
要进入中列,首先移除外列的触子(15 至 21,见图40)。

- 与图 40 中描述的程序相同。

(ill. 41) Middle row (8 to 14)

Attention:
To access the middle row, first remove the contacts of the outer rows (15 to 21, see ill. 40).

- identical procedure as described in ill. 40.

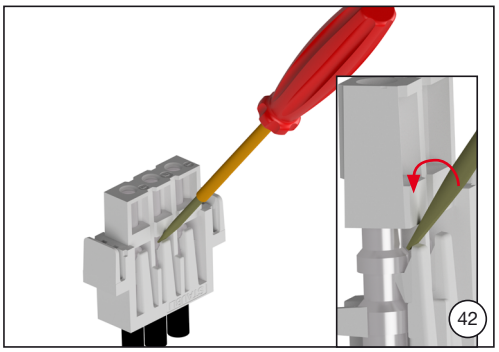

(图 42)
Ø 3 mm 触子：
用螺丝刀(2 号)小心地松动支撑块保持夹处的触子。拉出松动的触子电缆以拆下支撑块上的触子。

(ill. 42)
Ø 3 mm contacts:
Use a screwdriver (size 2) to carefully release the contact from the carrier holding clip. Pull the released contact's cable to remove contact from carrier.

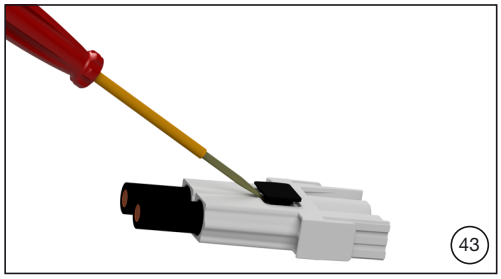

(图43)
Ø 4 mm 触子：
拆下固定夹并将触子从支撑块中拉出。

(ill. 43)
Ø 4 mm contacts:
Remove retaining clip and pull out contacts from carrier.

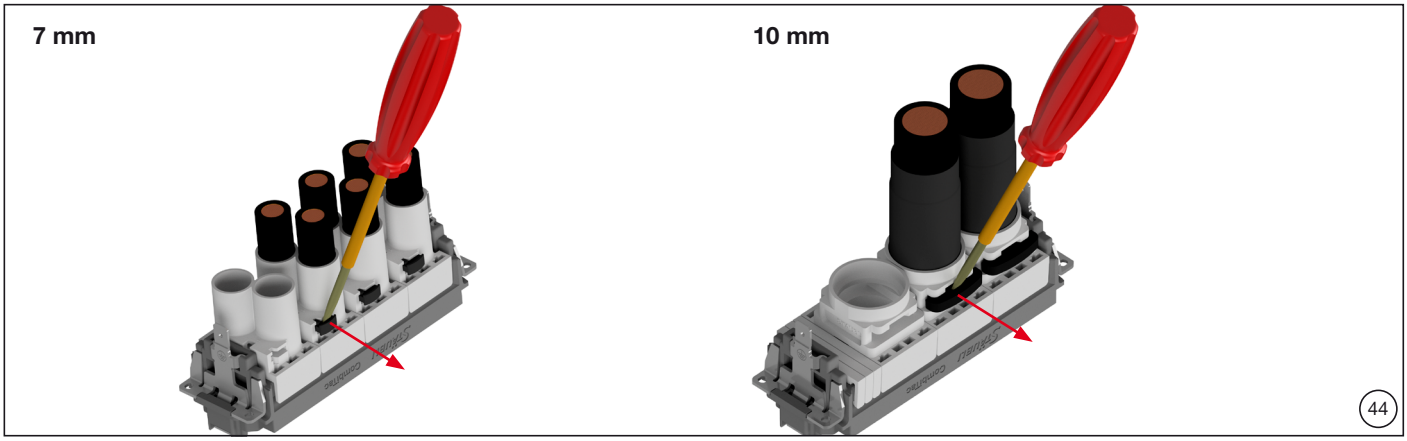

(图 44)
Ø 7 mm 和 10 mm 触子：
拆下固定夹并将触子从支撑块中拉出。

(ill. 44)
Ø 7 mm and 10 mm contacts:
Remove retaining clip and pull out contacts from carrier.

压缩空气耦合器

压缩空气耦合器为预装件，无法从支撑块上拆下。

Compressed-air couplers

Compressed air couplings are pre-assembled and cannot be removed from the carrier.

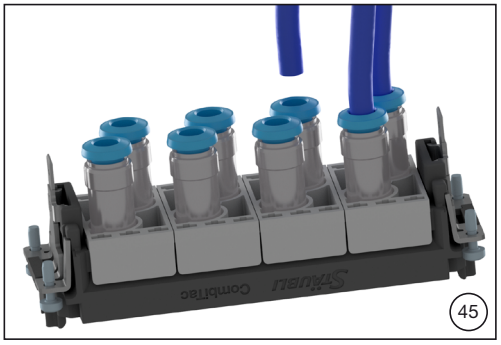

(图 45)
若管件插入了错误的插槽，可将其拆下并重新插入其他插槽。

(ill. 45)
Tubes can be removed and re-inserted in other slots in case of wrong slot insertion.

编号

CombiTac direqt 框架允许选择编码螺钉，以防止错配。
编码选项可以使用安装螺钉按照以下配置安排安装。

Coding

CombiTac direqt frames allow option of coding screws to prevent incorrect mating.
The coding options can be arranged in the following configurations using mounting screws.

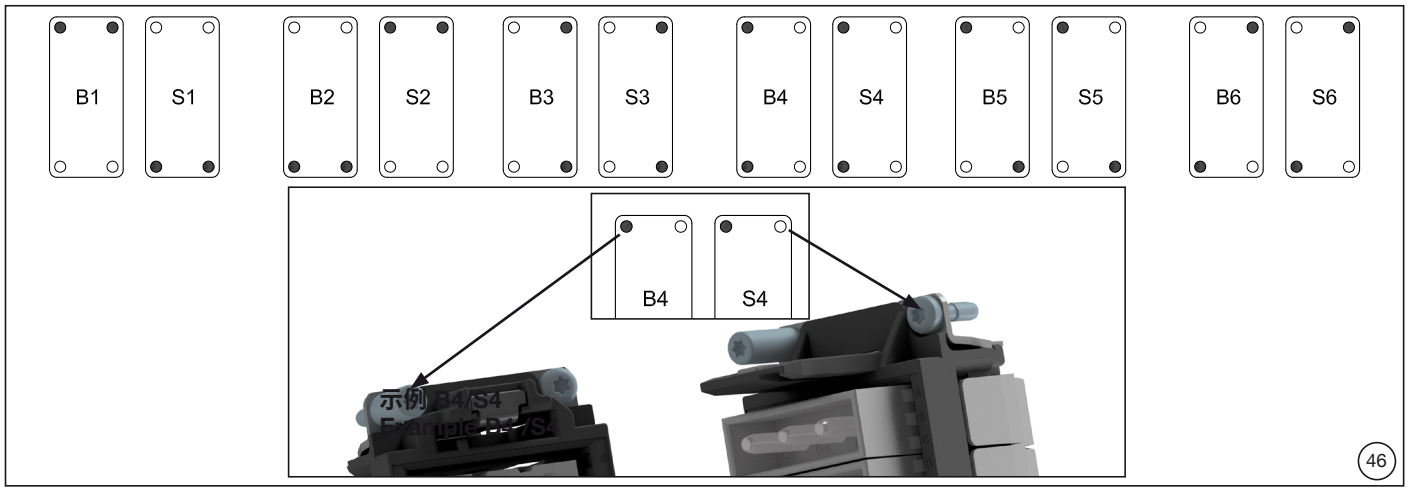

（图 46）
编号变体
S = 插针侧
B = 插座侧
● = 编号插针

(ill. 46)
Coding variants
S = Pin side
B = Socket side
● = Coding pin

外壳尺寸1到6

所有铝制 DIN 外壳 (IP65) 注意事项：
在首次使用前和 5000 次插拔后，使用长效商用滚动轴承润滑脂和滑动轴承润滑脂（例如 Klüber LDS 18 SPECIAL 或 Klüberlectric KR44-402）润滑外壳滚筒、轴和杠杆制动器。每 1000 次插拔检查一次，确保锁紧机构的螺钉没有松动。如果松动，则将其拧紧至 1.9 Nm。

观察：
检查外壳密封圈是否有明显破损！

Housing sizes 1 to 6

Note for all aluminum DIN housings (IP65):
Before first use and after 5’000 cycles, lubricate the housing rollers, axles and lever stops with commercial long-lasting rolling and plain bearing grease. e.g. Klüber LDS 18 special or Klüberlectric KR44-402. Every 1’000 cycles check to ensure that the locking mechanism screws have not loosened. If loosened, tighten them up to 1.9 N m.

Observation:
Check housing seals visually for damage!

密封圈更换

可以订购丁腈橡胶 (NBR) 材质的外壳用于替换。

注意事项：
用尖嘴钳拆下 尺寸2、3、4铝制 DIN 外壳的密封圈。手动压入新的密封圈。

Replacement seals

Housing seals from NBR material can be ordered as replacements.

Note:
Use a needle-nose pliers to remove replaceable seals of aluminum DIN Housings size 2, 3, 4. New seal can be inserted by hand.

外壳尺寸 Housing size	上密封 Upper seal	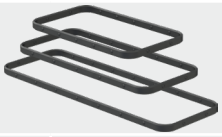	下密封 Lower seal	
	型号 Type	订货号 Order No.	型号 Type	订货号 Order No.
2	CT-DDI-SM2	33.2782	CT-PDI-SM2	33.2792
3	CT-DDI-SM3	33.2783	CT-PDI-SM3	33.2793
4	CT-DDI-SM4	33.2784	CT-PDI-SM4	33.2794

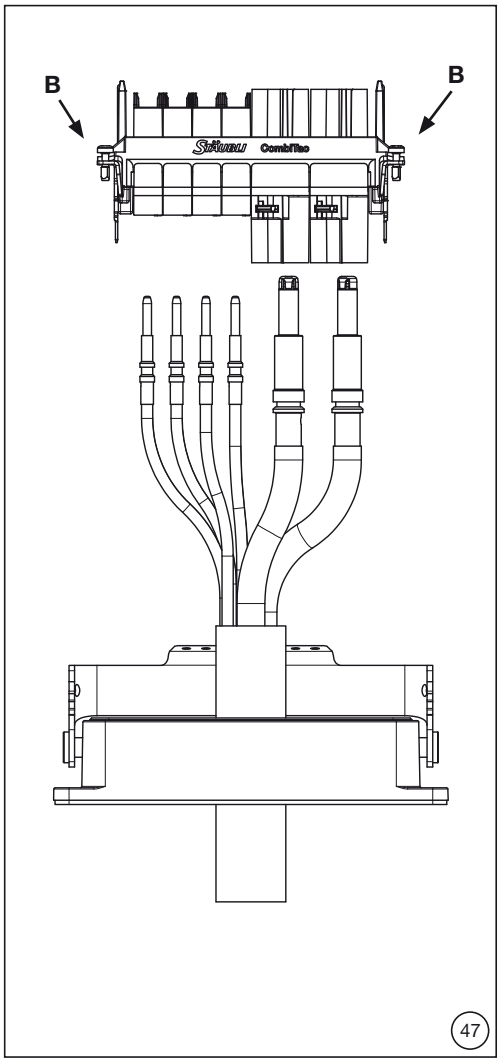

底座外壳安装

（图 47）

- 拧下 4 个螺钉 (B)，从底座外壳上拆下 CombiTac。
- 将带有触子的电缆穿过底座外壳，然后装入 CombiTac 支撑块。
- 拧回 4 个螺钉 (B)，将 CombiTac 重新固定到底座外壳中。拧紧扭矩 1.2 N m

注意事项：
装运过程中，螺丝未拧紧。如果外壳上没有用于拧紧的螺纹，请在螺丝孔中拧入自攻螺丝。

注意事项：
准备电缆，请参见第 9 页。

注意事项：
电缆长度 L (图 12) 取决于 CombiTac 配置。必须确保 CombiTac 安装到外壳后，触子不会受到任何拉力影响。

Installing in surface mount housing

(ill. 47)

- Remove CombiTac from surface mount housing by unscrewing the 4 screws (B).
- Pass cables with contacts through surface mount housing and assemble into the CombiTac carriers.
- Secure the CombiTac back into the surface mount housing by screwing the 4 screws (B) back on. Tightening torque 1.2 N m

Note:
Screws are shipped loose. If there are no threads for screwing in the housings, screws are self tapping in the holes.

Note:
Cable preparation, see page 9.

Note:
Cable length L (ill. 12) depends on the CombiTac configuration. It must be ensured that no tensile stress impacts the contacts after mounting the CombiTac in the housing.

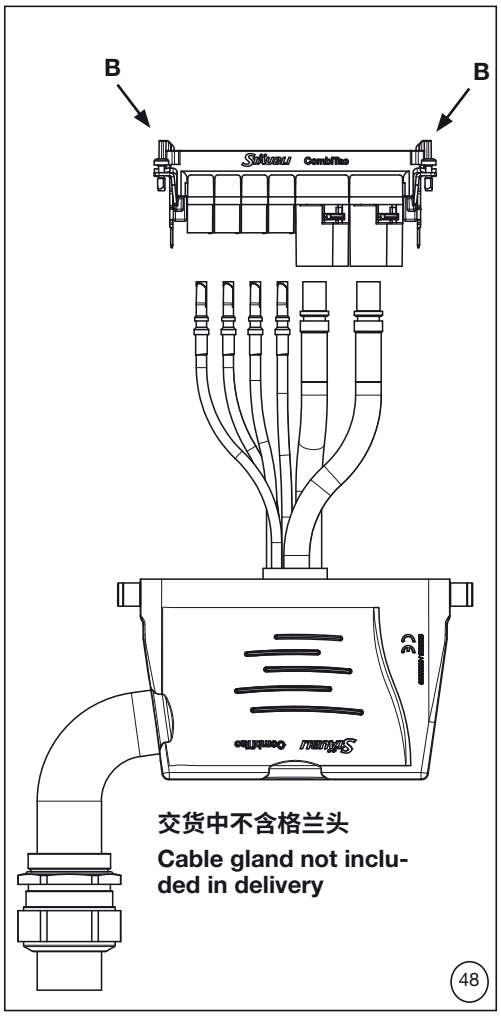

耦合器外壳安装

(图 48)

- 拧下 4 个螺钉 (B)，从耦合器外壳上拆下 CombiTac。
- 将带有触子的电缆穿过耦合器外壳，然后装入 CombiTac 支撑块。
- 拧回 4 个螺钉 (B)，将 CombiTac 重新固定到耦合器外壳中。拧紧扭矩 1.2 N m。
- 最后，拧紧格兰头并确保没有对触子施加拉力。

注意事项：
装运过程中，螺丝未拧紧。如果外壳上没有用于拧紧的螺纹，请在螺丝孔中拧入自攻螺丝。

注意事项：
格兰头的拧紧扭矩须符合供应商规范。

注意事项：
DIN 金属外壳可通过标准导向销 (6.3 mm × 0.8 mm) 接地。可将最大 6 mm^2 的电缆连接到扁平触子。
将两个接地片连接到接地保护。

注意事项：
对于 10 mm 触子，热缩管必须穿过格兰头送入。

Installing in housing coupler hood

(ill. 48)

- Remove CombiTac from housing coupler hood by unscrewing the 4 screws (B).
- Pass cables with contacts through housing coupler hood and assemble into the CombiTac carriers.
- Secure CombiTac back into the housing coupler hood by screwing the 4 screws (B) back on.
  Tightening torque 1.2 N m.
- Finally tighten cable gland and make sure that no tensile forces are applied to the contacts.

Note:
Screws are shipped loose. If there are no threads for screwing in the housings, screws are self tapping in the holes.

Note:
Cable gland tightening torque according to supplier specifications.

Note:
The DIN metal housings can be earthed through the flat contact (6.3 mm × 0.8 mm) on the standard earthing lug. Cables up to a maximum of 6 mm^2 may be connected to the flat contact.
Connect both earthing lugs to the protective earth.

Note:
For 10 mm contacts, the heat shrink tube must be fed through the cable gland.

面板安装 壳体安装 - 钻孔平面图

Panel mounting - Drilling plans

标准:面板安装框架(浮动)

Standard: Panel mount frames (floating)

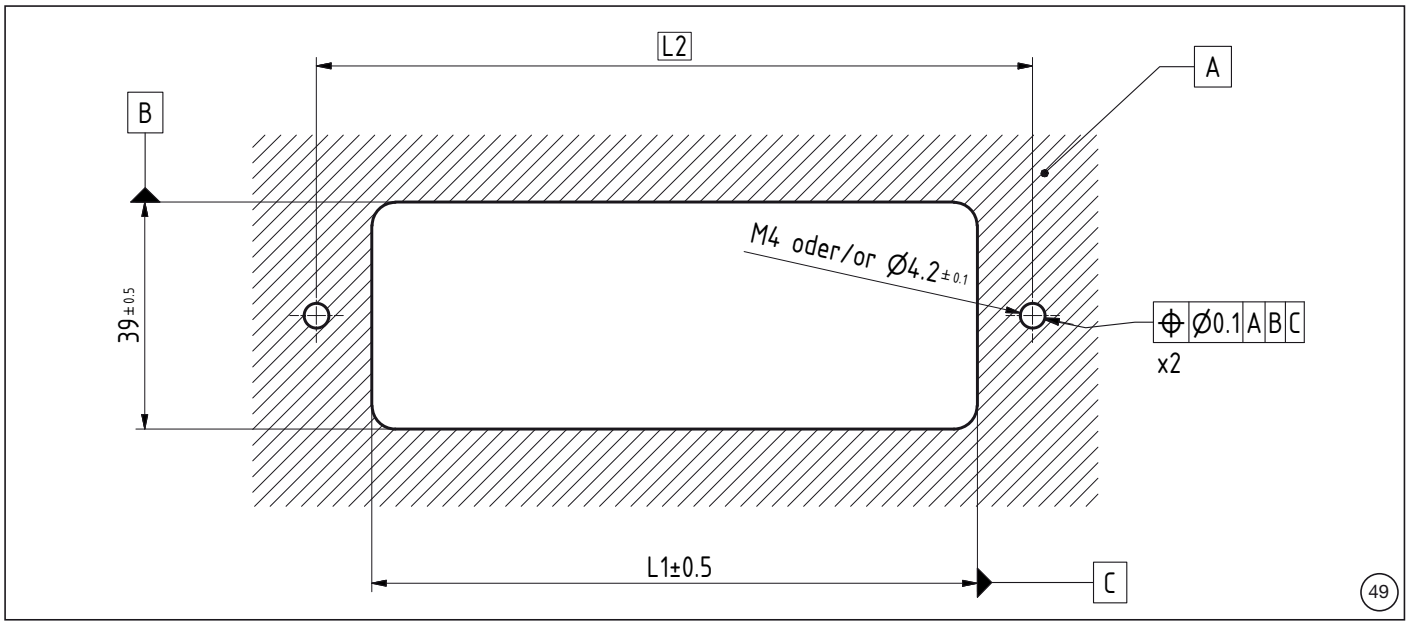

(图/ill. 49) 尺寸 Size	框架尺寸 Frame size			
	1	2	3	4
L1	44	57	78	104
L2	63	76	97	123

特殊情况:安装在面板上的外壳应用框架(固定)

Special case: Frames for housing mounting on panel (fixed)

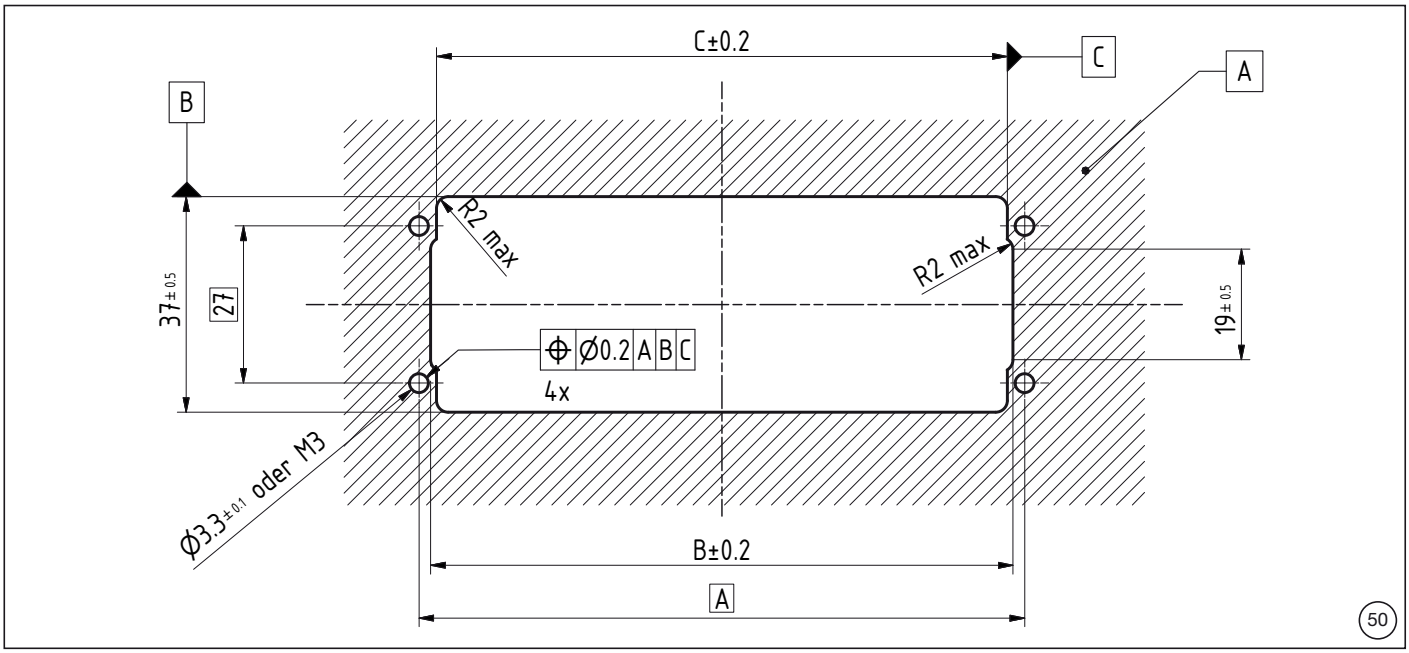

(图/ill. 50) 尺寸 Size	框架尺寸 Frame size			
	1	2	3	4
A	44	57	78	104
B	40	53	74	100
C	38	51	72	98

面板安装

允许的最大安装偏移量。

Panel mounting

Max. permissible mounting offset.

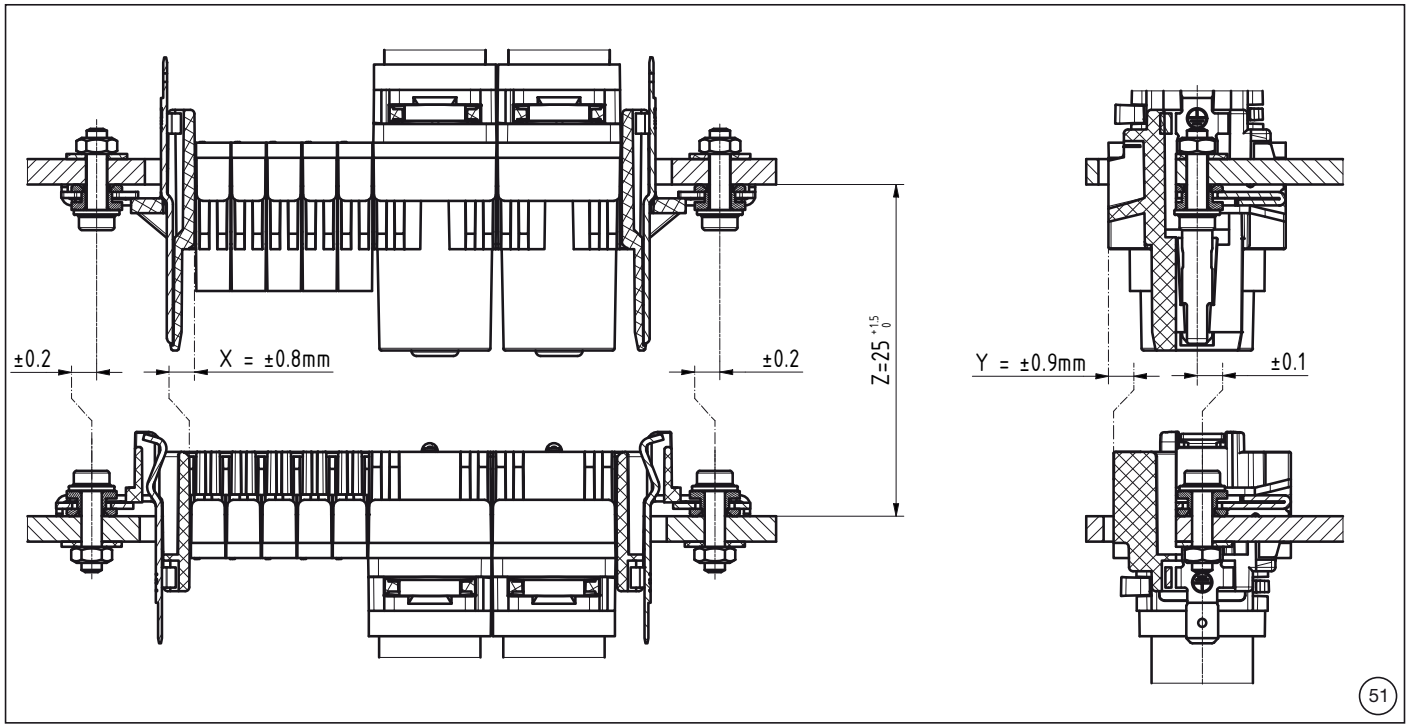

注意/Notes:

生产商/Producer:
Stäubli Electrical Connectors AG
Stockbrunnenrain 8
4123 Allschwil/Switzerland
Tel. +41 61 306 55 55
Fax +41 61 306 55 56
mail ec.ch@staubli.com
www.staubli.com/electrical

© by Stäubli Electrical Connectors AG, Switzerland – MA417 – 03.2024, Index k, Marketing Communications – 随时可能变更 / Subject to alterations