FAST MOVING TECHNOLOGY

TS2-100

4 axis industrial robot

reddot winner 2021

Characteristics

Load capacity	8.4 kg
Number of degrees of freedom	4
Repeatability XY - ISO 9283	± 0.02 mm
Repeatability Z - ISO 9283	± 0.004 mm
Repeatability Rz - ISO 9283	± 0.003°
Weight floor version	41 kg (vertical cable outlet: 37 kg)
Attachment methods	Floor / Ceiling (option)

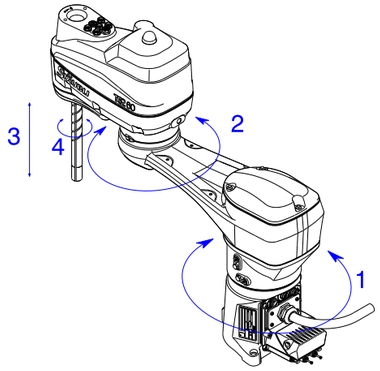

Performance

Joint speed - axis 1	550°/s
Joint speed - axis 2	700°/s
Joint speed - axis 3	2100 mm/s
Joint speed - axis 4	2500°/s
Maximum inertia axis 4	0.1 kg.m²
Brakes	Axis 3 and 4
Cycles per minute *	170 (0.35 s)

*Our programing and simulation software Stäubli Robotics Suite 2019 enables an easy and precise definition of your specific application cycle time. Cycle time for 25 mm - 300 mm - 25 mm motion pattern with 2 kg payload.

Standard U cycle 25-300-25 mm:

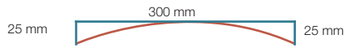

Work envelope and range of motion

Maximum reach between axis 1 and 4	1000 mm
Minimum reach between axis 1 and 4	206 mm

Angular reach axis 1	360°
Angular reach axis 2	320°
Z Stroke	200 mm or 400 mm (option)
Angular reach axis 4	1000° (1)

(1) Under special conditions, consult us.

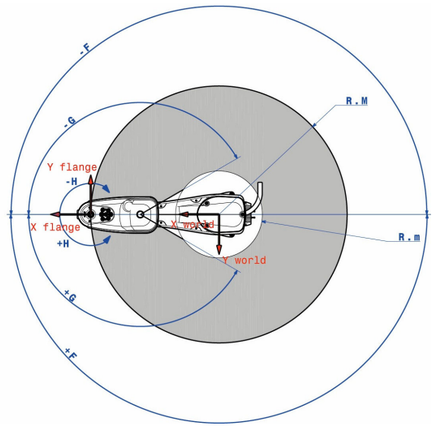

Installation environment

Working temperature according to NF EN 60 204-1	+5°C to +40°C
Humidity according to standard directive NF EN 60 204-1	30% to 95% max. non-condensing
Vertical cable outlet version	Available
Stäubli series controller	CS9
Pressurized version	Available
Cleanroom standard ISO 14644-1	Class ISO 6
Protection class according to EN 60529	IP34 standard / IP54 with ball screw cover / IP65 with ball screw cover and bellows

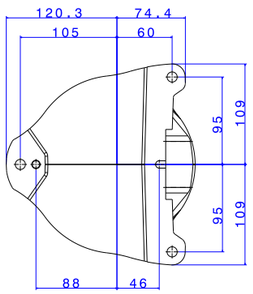

Base interface
(Horizontal cable outlet)

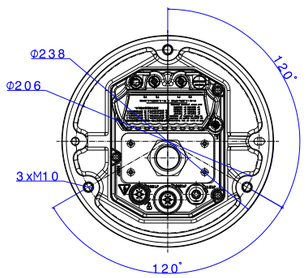

Base interface
(Vertical cable outlet)

User interface

	On forearm	On tool flange or tool changer (option)
Mechanical	NF EN ISO 9409-1 Ø 50 mm, 4 screws M6	
Pneumatic lines	3 direct pneumatic lines or 2 electrodistributors in option : pressure 5/2 bi-stable or pressure 5/3 mono-stable "center closed" or vacuum 3/2 mono-stable or vacuum + pressure 3/2 mono-stable	
Electrical cables	10 electrical cables I/O + 1 multibus cable (4 wires) cat5e DIN M12 in the arm	3 electrical cables I/O + 1 multibus cable (4 wires) cat5e DIN M12 in the arm

MPS tool changer (option)

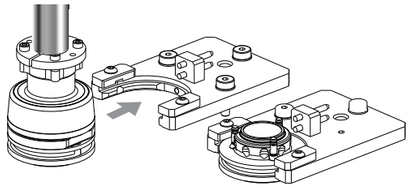

Automatic operation

Manual operation

Dimensions

Floor mounting

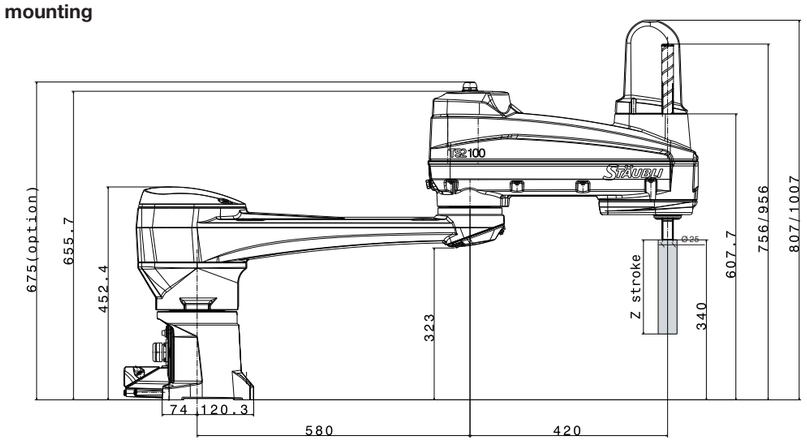

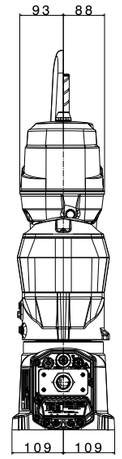

Ceiling mounting (vertical cable outlet)

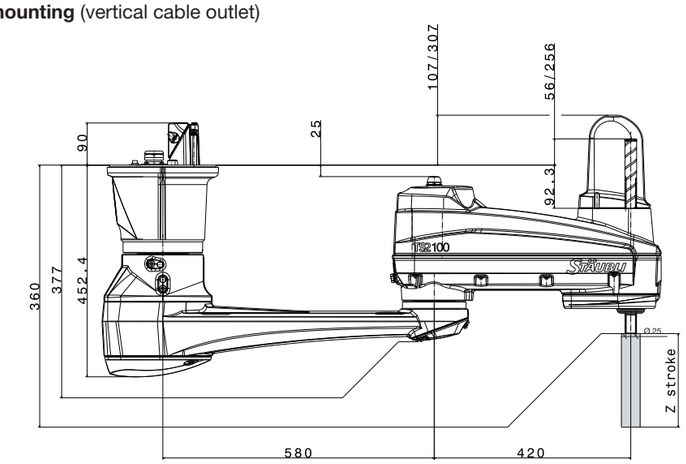

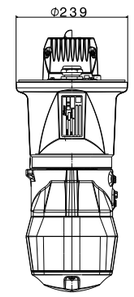

Sensitive environment versions

Harsh (Automotive, Metal)	Available
ESD (ElectroStatic Discharge) version	Available
HE (Humid Environment) version	Available
Stericlean version	Available

Available options

Cover axis 3	for higher protection class
User harness from forearm to end of arm (flange or tool changer)	for higher connectivity
Flange interface	for easy integration
Tool changer interface	for more flexibility
Vertical cable outlet	for clean and clever integration
H1 oil and grease	for hygienic demands

D181.797.04

● Stäubli Units ○ Representatives/Agents

Global presence of the Stäubli Group

www.staubli.com

Staubli is a trademark of Stäubli International AG, registered in Switzerland and other countries. © Stäubli 05/2021 V16.
We reserve the right to modify product specifications without prior notice.
robot.mkg@staubli.com | Photos : Stäubli - Semaphore

STÄUBLI