MA213-01 (cn_en)
安装说明

CombiTac uniq

目录

安全须知.....2 – 3
工具准备.....4
线缆准备.....6
线缆装配.....8
PCB 触子开孔图.....10
触子装配.....11
堵头装配.....13
检查触子装配.....13
装配后触子的控制尺寸.....14
注意事项.....15 – 16

MA213-01 (cn_en)
Assembly instructions

CombiTac uniq

Content

Safety Instructions.....*2 – 3*
Tools required.....4
Lead preparation.....6
Lead assembly.....8
Drilling plans PCB contacts.....10
Contact assembly.....11
Assembly of blind plugs.....13
Checking the contact assembly.....13
Control dimensions of assembled contacts.....14
Notes.....15 – 16

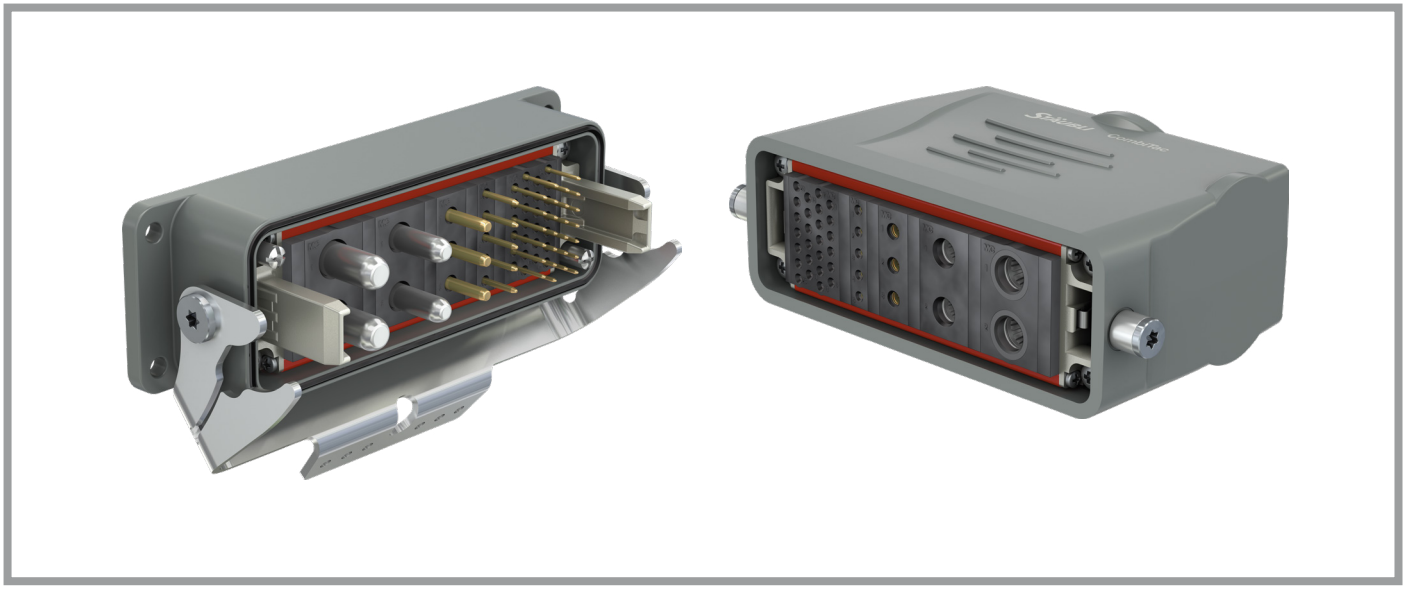

安全须知

仅可使用 Stäubli 指定的组件和工具。自行装配时，切勿背离本手册所述的制备及装配说明，否则 Stäubli 无法保证产品安全性或性能达到官方技术参数。请勿以任何方式修改产品。

可与 Stäubli 元件插合的非 Stäubli 原厂制造的连接器，在某些情况下，某些制造商甚至将其描述为“与 Stäubli 兼容”，但该连接器并不符合长期稳定安全的电连接要求，而且出于安全考虑，不得与 Stäubli 元件插合在一起。因此，Stäubli 对因此类连接器（即未经 Stäubli 批准）与 Stäubli 元件插合而造成的任何损失不承担任何责任。

如您未遵守上述警告，则 Stäubli Electrical Connectors (Stäubli) 不承担任何责任。

Safety instructions

Use only the components and tools specified by Stäubli. In case of self-assembly, do not deviate from the preparation and assembly instructions as stated herein, otherwise Stäubli cannot give any guarantee as to safety or conformity with the technical data. Do not modify the product in any way.

Connectors not originally manufactured by Stäubli which can be mated with Stäubli elements and in some cases are even described as ”Stäubli-compatible” by certain manufacturers do not conform to the requirements for safe electrical connection with long-term stability, and for safety reasons must not be plugged together with Stäubli elements. Stäubli therefore does not accept any liability for any damages resulting from mating such connectors (i.e. lacking Stäubli approval) with Stäubli elements.

Stäubli Electrical Connectors (Stäubli) does not accept any liability in the event of failure to observe these warnings.

IEC 60417-6182
安装需电气专业知识

Installation, electrotechnical expertise

产品可由具备电气技能或受过此方面指导的人员依照适用的安全法规进行装配或安装。

The products may be assembled and installed by electrically skilled or instructed persons duly observing all applicable safety regulations.

IEC 60417-6042
注意电击风险

Caution, risk of electric shock

请在断电状态下工作
操作电气装置时，请遵守五项安全规定。
各电气装置确定后，应按照规定顺序执行以下五项基本要求（除非另有必要理由）：

- 完全分离；
- 确保不会重新连接；
- 确认无工作电压；
- 进行接地和短路；
- 针对临近带电部件提供防护。

任何从事此工作活动的人员均应具备电气技能或受过此方面指导，或者由同等能力的人员监督。
来源：EN 50110-1:2013

最终应用时，还应检查电击防护。

Work in a de-energized state
Follow the five safety rules, when working on electrical installations.
After the respective electrical installations have been identified, the following five essential requirements shall be undertaken in the specified order unless there are essential reasons for doing otherwise:

- disconnect completely;
- secure against re-connection;
- verify absence of operating voltage;
- carry out grounding and short-circuiting;
- provide protection against adjacent live parts.

Any person engaged in this work activity shall be electrically skilled or instructed, or shall be supervised by such a person.
Source: EN 50110-1:2013

Protection against electric shock shall be checked in the end-use applications too.

IEC 60417-6070
在负载下请勿断开

Do not disconnect under load

仅当额定电压不超过 AC 1000 V/DC 1500 V时，连接器才可能在带电压的状态下断开和插合。
当额定电压超过 AC 1000 V/DC 1500 V时，仅在连接器插合状态下方可带电，且不允许在负载下进行断开和插合动作。这也适用于在单一型号中同时配置电连接模块与气体和液体模块的情况。

Connecting and disconnecting when live is only permitted if the rated voltage does not exceed AC 1000 V/DC 1500 V.
For rated voltages over AC 1000 V/DC 1500 V, the voltage must only be applied in mated condition, disconnecting under load or connecting when live is not permitted. This also applies for electrical connections in close proximity to fluid and gas connections.

安全须知	Safety instructions
ISO 7000-0434B **注意**	**Caution**
每次使用连接器前，需提前检查外部是否有缺陷(尤其是绝缘层)如有安全疑虑，必须咨询专业人员或更换连接器。	Each time the connector is used, it should previously be inspected for external defects (particularly the insulation). If there are any doubts as to its safety, a specialist must be consulted or the connector must be replaced.
带外壳应用的连接器的防水功能可参考相关产品的IP保护等级。	The plug connectors are watertight in accordance with the product specific IP protection class.
未插合的连接器必须防潮防尘。被污染的公母连接器不应插合使用。	Unmated plug connectors must be protected from moisture and dirt. The male and female parts must not be plugged together when soiled.
产品使用说明或技巧	**Useful hint or tip**
欲了解更多技术参数，请参阅产品目录。	For further technical data please see the product catalog.

工具准备

Tools required

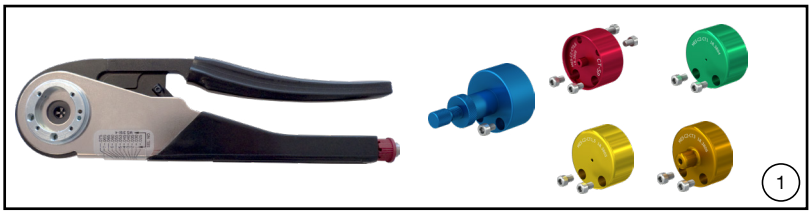

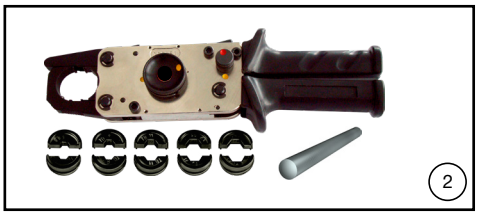

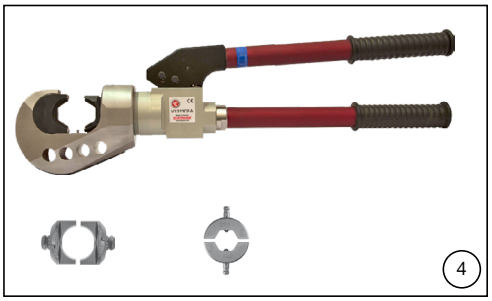

ill.	型号 Type	订货号 Order No.	导体横截面 Conductor cross section	描述 Description	MA
1	**CT-M-CZ**	**33.3800**		压接钳/Crimping pliers	MA079
	MES-CZ	**18.3801**	0.14 – 4 mm²	可调节定位器，适用于直径1mm、1.5mm和3mm的触子（不适用于直径0.6 mm 的触子） Locator adjustable for Ø 1 mm, Ø 1.5 and Ø 3 mm contacts (not suitable for Ø 0.6 mm contacts)	
	MES-CZ-CT0,6	**18.3809**	0.14 – 0.25 mm²	Ø 0.6 mm触子定位器/Crimping die	
	MES-CZ-CT1	**18.3804**	0.25 – 0.75 mm²	Ø 1 mm触子定位器/Crimping die	
	MES-CZ-CT1,5	**18.3805**	0.5 – 1.5 mm²	Ø 1.5 mm触子定位器/Crimping die	
	MES-CZ-CT3	**18.3806**	2.5 – 4 mm²	Ø 3 mm触子定位器/Crimping die	
2	**M-PZ13**	**18.3700**	-	压接钳/Crimping pliers	MA224
	MES-PZ-TB5/6	**18.3701**	6 mm²	压接模具/Crimping die	
	MES-PZ-TB8/10	**18.3702**	10 mm²	压接模具/Crimping die	
	MES-PZ-TB9/16	**18.3703**	16 mm²	压接模具/Crimping die	
	MES-PZ-TB11/25	**18.3704**	25 mm²	压接模具/Crimping die	
	MPS-PZ13	**18.3707**		测试压模/Test insert	
	MALU-PZ13	**18.3708**		圆形测试杆/Round test rod	
3	**M-PZ-T2600**	**18.3710**		压接钳/Crimping pliers	MA226
	TB9-13	**18.3712**	16 mm² + 35 mm²	压接模具/Crimping die	
	TB11-14,5	**18.3713**	25 mm² + 50 mm²	压接模具/Crimping die	
	TB8-17	**18.3711**	10 mm² + 70 mm²	压接模具/Crimping die	
	TB7-20	**18.3714**	95 mm²	压接模具/Crimping die	
	TB10-16 [1]	**70740104**	70 mm²	压接模具/Crimping die	
	TB12-14 [1]	**11009912**	50 mm²	压接模具/Crimping die	
4	**V1311C2-A**	**70740141**	-	压接钳/Crimping pliers	MA427
	V1330	**11006845**		安装座/Insert holder	
	B22		120 mm²	压接模具/Crimping die	

[1]仅适用于符合 DIN 46234 的压接电缆接头/Only for crimp cable lugs according to DIN 46234

插入工具 Insertion tool	订货号 Order No.	型号 Type	适用的电源插针/插座的标称直径 For nominal-Ø socket/pin	适用的其他触子 For contact
	33.3003	CT-E-WZ0,6	0.6 mm	
	33.3001	CT-E-WZ1-9,5	1 mm	热电偶触子 Thermocouple contacts
	18.3003	ME-WZ1,5/2	1.5 mm	
	18.3010	ME-WZ3	3 mm	
	18.3013	ME-WZ5	6 mm	CT-POF/SL 同轴触子 Coaxial contacts
	18.3016	ME-WZ6	8 mm	
	18.3015	MSA-WZ5[1)]	6 mm	
	18.3018	MSA-WZ6[1)]	8 mm	
	18.3022	MSA-WZ8	8 mm (M8A/PE-L)	
	18.3014	MBA-WZ5[2)]	6/8 mm	

拔出工具(插座) Extraction tool (socket)	订货号 Order No.	型号 Type	适用的电源插针/插座的标称直径 For nominal-Ø socket/pin	适用的其他触子 For contact
	33.3002	CT-A-WZ0,6	0.6 mm	
	18.3001	MBA-WZ1/1,2	1 mm	
	18.3004	MBA-WZ1,5	1.5 mm	热电偶触子 Thermocouple contacts
	18.3011	MBA-WZ3	3 mm	
	18.3017	MBA-WZ6	6/8 mm	
	18.3015	MSA-WZ5		同轴触子 Coaxial contacts
	33.3022	CT-AWZ/POF[3)]		POF 触子 POF contacts
	33.3048	CT-NET-AWZ		CT-NET 触子 CT-NET contacts
	33.3006	CT-AWZ-2,5HV		

拔出工具(插针) Extraction tool (pin)	订货号 Order No.	型号 Type	适用的电源插针/插座的标称直径 For nominal-Ø socket/pin	适用的其他触子 For contact
	33.3002	CT-A-WZ0,6	0.6 mm	
	18.3002	MSA-WZ1/1,2	1 mm	
	18.3005	MSA-WZ1,5	1.5 mm	热电偶触子 Thermocouple contacts
	18.3012	MSA-WZ3	3 mm	
	18.3018	MSA-WZ6	6 mm	CT-POF/SL
	18.3022	MSA-WZ8	8 mm	同轴触子 Coaxial contacts
	33.3006	CT-AWZ-2,5HV		

[1)] 适用于外螺纹螺钉连接的触子。/For contacts with screw connection with external thread.
[2)] 适用于内螺纹螺钉连接的触子。/For contacts with screw connection with internal thread.
[3)] 同时适用于插座和插针。/Extraction tool for pin and socket.

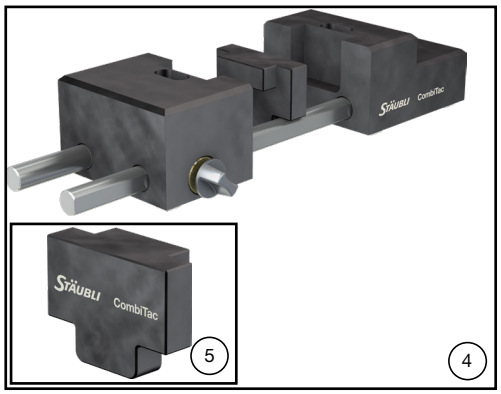

(ill. 4)
专用工具 CT-K-WZ，用于辅助将触子安装到支撑块中，订货号 33.3040

(ill. 5)
专用工具 CT-K-WZ-AFL，用于辅助将 8 mm插座插入支撑块CT-E8-2-IP2X (33.4139) 中，订货号 33.3042

(ill. 4)
Special tool CT-K-WZ, for easy insertion of the contacts into the contact carrier, Order no. 33.3040

(ill. 5)
Insert CT-K-WZ-AFL, for insertion of sockets in contact carrier CT-E8-2-IP2X (33.4139), Order no. 33.3042

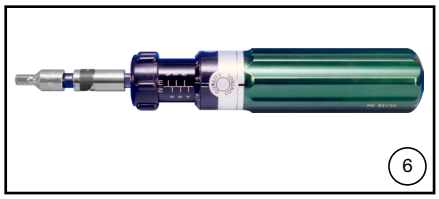

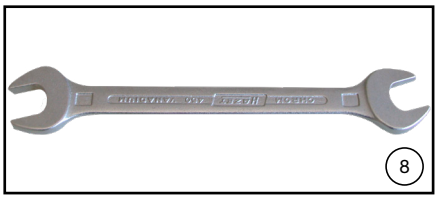

ill.	描述 Description	适用于 Used for	关键尺寸 Key size				拧紧扭矩 Tightening torque			
			mm				mm			
	标称直径/ Nominal Ø		Ø 12	Ø 8 (PE-L)*	Ø 8	Ø 6	Ø 12 (M10)	Ø 8 (PE-L)* (M8)	Ø 8 (M6)	Ø 6 (M5)
6	内六角形凹头螺钉专用的扭矩扳手[1] Torque wrench[1] for hexagonal socket head screw	电缆接线头装配 Ø 8 und Ø 6 mm 电缆接线头装配 Cable lug assembly Ø 8 and Ø 6 mm contacts	8	-	5	4	10 N m[2] 44 N m[3]	-	3 N m[2] 8.5 N m[3]	2 N m[2] 5 N m[3]
7	扭矩扳手[1] Torque wrench[1]	电缆接线头装配 Cable lug assembly	-	13	10	8	-	6 N m[2]	3 N m[2] 8.5 N m[3]	2 N m[2] 5 N m[3]
8	开口扳手[1] Open-end spanner[1]	电缆接线头装配 Cable lug assembly	15	10	8	7	-	-	-	-

* 12 mm 触子的主要接地触子/leading earth contacts for the 12 mm contacts
[1] 市售零件/Parts available commercially
[2] 适用于装有黄铜螺钉的内外螺纹 /For internal and external thread with brass screws
[3] 只适用于钢材螺钉/Only for steel screws

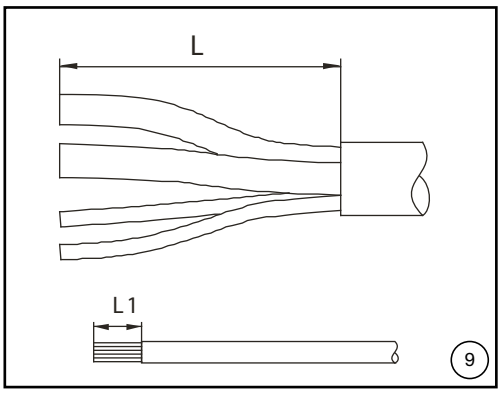

线缆准备

注意事项：
剥线长度 **L** 取决于 CombiTac 的配置，并且要足够长，才能确保触子在安装到支撑块中时，不会受到电缆拉力（电缆固定夹）。

(ill. 9)
先将配件（例如格兰头）穿过线缆，再剥去多芯线绝缘层和单芯线绝缘层。
安装在外壳中的线缆尺寸 **L** 必须根据具体情况进行调整，参见 MA213。
单芯线 **L1** 尺寸参见第 7 页的表 1。

Lead preparation

Note:
Stripping length **L** depends on the CombiTac configuration and must be sufficient to ensure tensile forces are not applied to the contacts when assembled in carriers (cable strain relief).

(ill. 9)
Place accessories (e.g. cable gland) on the lead. Strip lead and single conductors.
Dimension **L** of the lead for installation in housing has to be adapted from case to case, see MA213.
Dimension **L1** for single conductors, see Tab. 1, page 7.

Tab. 1

插针/插座的标称直径 Nominal Ø pin/socket	导体横截面 Conductor cross section		压接钳/Crimping pliers						L1 ± 0.5	控制尺寸（最大） Control dimension (Max.)
			CT-M-CZ			M-PZ-13	M-PZ-T2600	V1311C2-A		
mm	mm²	AWG	Selector AWG-N°	Selector SEL-N°	定位器 Locator	压接模具 Crimping die			mm	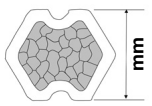
热电偶触子	0.14	26	26	1	MES-CZ[1]	-	-	-	4.5	
Thermocouple contacts	0.2	24	24	2	MES-CZ[1]	-	-	-	4.5	
	0.34	22	22	3	MES-CZ[1]	-	-	-	4.5	
(DBP2-/DSP2/CT-BP1/ CT-SP1)	0.5	20	20	4	MES-CZ[1]	-	-	-	4.5	
0.6	0.14	26	26	1	MES-CZ-CT0,6	-	-	-	5	
0.6	0.25	24	24	2	MES-CZ-CT0,6	-	-	-	5	
1	0.25	24	24	2	MES-CZ-CT1	-	-	-	4.5	
1	0.5	20	20	4	MES-CZ-CT1	-	-	-	4.5	
1	0.75	18	18	5	MES-CZ-CT1	-	-	-	4.5	
1.5	0.5	20	20	4	MES-CZ-CT1,5	-	-	-	4.5	
1.5	1	18	18	5	MES-CZ-CT1,5	-	-	-	4.5	
1.5	1.5	16	16	6	MES-CZ-CT1,5	-	-	-	4.5	
3	2.5	14	14	7	MES-CZ-CT3	-	-	-	8	
3	4	12	12	8	MES-CZ-CT3	-	-	-	8	
6	6	10	-	-	-	MES-PZ-TB5/6	-	-	10	4.3
6	10	8	-	-	-	MES-PZ-TB8/10	TB8-17	-	10	6.3
6	16	6	-	-	-	MES-PZ-TB9/16	TB9-13	-	10	7.3
8	10	8	-	-	-	MES-PZ-TB8/10	TB8-17	-	10	6.3
8	16	6	-	-	-	MES-PZ-TB9/16	TB9-13	-	10	7.3
8	25	4	-	-	-	MES-PZ-TB11/25	TB11-14,5	-	10	8.8
8	35	2	-	-	-	-	TB9-13	-	12	10.2
8	50	1/0	-	-	-	-	TB11-14,5	-	23	11.4
12	50	1/0	-	-	-	-	TB11-14,5	-	23	11.4
12	70[2]	2/0	-	-	-	-	TB8-17	-	26	13.4
12	95[2]	3/0	-	-	-	-	TB7-20	-	28	15.8
12	120	MCM: 262	-	-	-	-	-	B22	29	16.3
CT-KSCH25-8	25	4	-	-	-	-	TB10-16	-	11	8.2
CT-KSCH6-35 CT-KSCH35-8	35	2	-	-	-	-	TB12-14	-	12	10.2
CT-KSCH50-10 CT-KSCH50-8	50	1/0	-	-	-	-	TB11-14,5	-	16	11.4
CT-KSCH70-10	70[2]	2/0	-	-	-	-	TB8-17	-	18	13.4
CT-KSCH95-10	95[2]	4/0	-	-	-	-	TB7-20	-	20	15.8

[1] 定位器 MES-CZ 也可用于标称直径从 1 mm 到 3 mm 的插针/插座

[1] The locator MES-CZ can also be used for nominal Ø pin/socket from 1 mm up to 3 mm.

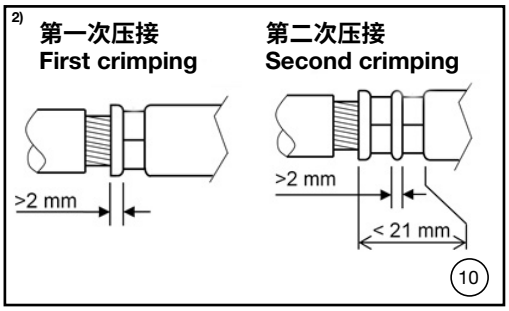

(ill. 10)

[2] 在导体截面积为 70 mm² 或 95 mm² 的压接端口中，必须并排进行两次压接。

该尺寸不适用电缆接线头。

(ill. 10)

[2] In crimp terminations with a conductor cross section of 70 mm² or 95 mm², two crimps must be performed side by side.

Dimensions not valid for cable lugs.

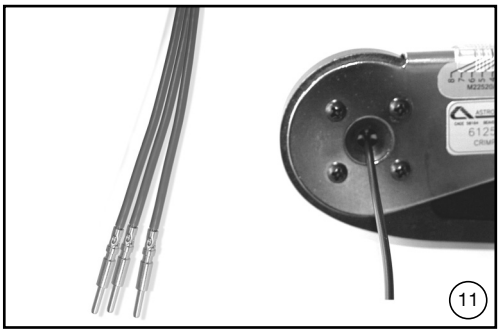

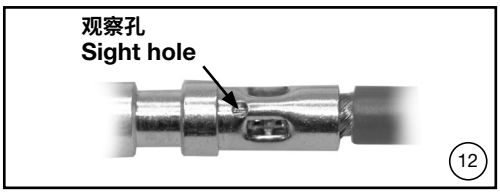

线缆装配

线缆压接

压接钳和压接模具参见第 7 页的表 1。

(ill. 11)
将电线尽可能深地插入触子压接套筒。

注意事项：
对于标称直径为 0.6 mm、1 mm、1.5 mm 和 3 mm 的触子：压接前后，必须能在观察孔中看到电线（图 12）。

注意事项：
标称直径大于 1.5 的触子必须使用热缩套管绝缘。

Lead assembly

Crimp connection

Crimping pliers and crimping die according to Tab. 1, page 7.

(ill. 11)
Insert wire into the contact crimping sleeve as far as it will go.

Note:
For contacts with nominal Ø 0.6 mm, 1 mm, 1.5 mm and 3 mm: Wires must be visible in the sight hole before and after crimping (ill. 12).

Note:
Contacts with nominal diameter higher than 1.5 mm must be insulated with shrink sleeves.

将热缩套管套在触子压接位置

(ill. 13)

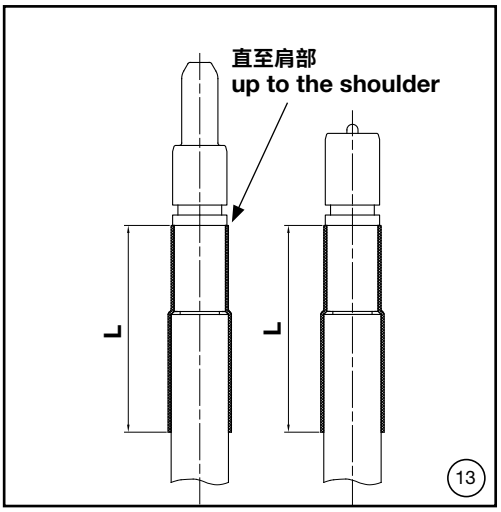

尺寸 Dimensions (mm)	CT-12 (S+B) [1] 50 mm² - 70 mm²
L +2/0	70

(ill. 14)

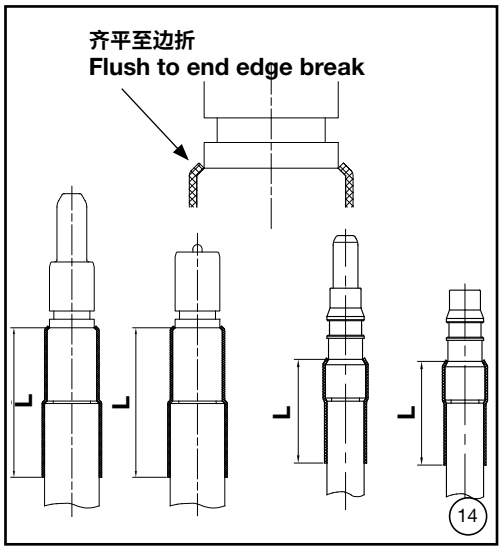

尺寸 Dimensions (mm)	CT-12 (S+B) [1]	CT-8/PE-L zu/to CT12		CT-8/... (S+B)
	95 mm²	S/50 mm²	S/35 mm²	35 mm²
L +2/0	90	70	70	45

[1] 安装在面板上和外壳中

[1] mounted on panel and in housing

Position shrink sleeve on contact

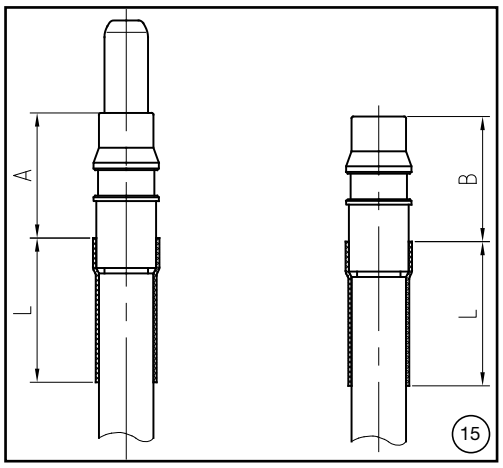

L = 热缩套管长度
A = 插针位置
B = 插座位置

(ill. 15)

尺寸 Dimensions (mm)	CT-8/PE-L zu/to CT-12				CT-8/... (S+B)	
	B/50²	B/35²	S/25²	B/25²	25²	16²-10²
L +2/0	70	70	50	70	45	50
A +0.5/0	-	-	25	-	23	19
B +0.5/0	25	25	-	25	23	19

尺寸 Dimensions (mm)	CT-8/6-PE				CT-6/...(S+B)	CT-3			
	S/16²	B/16²	S/25²	B/25²	Alle/All	S	B	S/PE	B/PE
L +2/0	40	45	45	50	40	30	30	30	35
A +0.5/0	21	-	25	-	19	23	-	24	-
B +0.5/0	21	21	-	25	19	-	23	-	24

L = Shrink sleeve length
A = Position on pin
B = Position on socket

螺纹连接

（用于电缆接线头装配，最大尺寸 95 mm²，参见 DIN 46234）。
Stäubli 可以为截面积为25 mm²、35 mm²、50 mm²、70 mm² 和 95 mm² 的电缆提供电缆接头：
CT-K-SCH25-8 订货号 33.4117
CT-K-SCH35-8 订货号 33.4116
CT-K-SCH50-8 订货号 31002862
CT-KSCH6-35 订货号 33.4039
K-SCH50-10 订货号 33001501
CT-K-SCH70-10 订货号 33.4114
CT-K-SCH95-10 订货号 33.4115

Screw termination

(For cable lug assembly, max. size 95 mm² according to DIN 46234).
Stäubli can supply a cable lug for a cable cross section of 25 mm², 35 mm², 50 mm², 70 mm² and 95 mm²:
CT-K-SCH25-8 order no. 33.4117
CT-K-SCH35-8 order no. 33.4116
CT-K-SCH50-8 order no. 31002862
CT-KSCH6-35 order no. 33.4039
K-SCH50-10 order no. 33001501
CT-K-SCH70-10 order no. 33.4114
CT-K-SCH95-10 order no. 33.4115

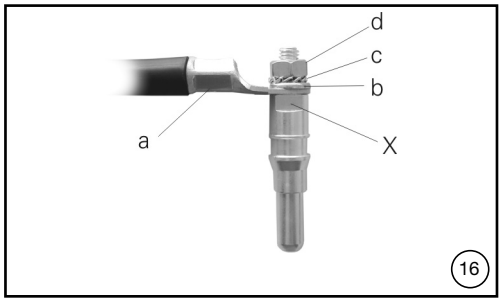

(ill. 16)
与外螺纹 M5、M6、M8 连接：
安装电缆接头 (a)、垫圈 (b)、锁紧垫圈 (c) 和螺母 (d)。用扭矩扳手拧紧螺母 (d)，并用开口扳手将其固定在位置 X。
最大拧紧扭矩：
M5：2 N m，**M6：**3 N m，**M8：**6 N m

(ill. 16)
Connection with external thread M5, M6, M8:
Install cable lug (a), washer (b), lock washer (c) and the nut (d). Tighten the nut (d) with a torque wrench and secure it with an open-end spanner at pos. X.
Max. tightening torque:
M5: 2 N m, **M6:** 3 N m, **M8:** 6 N m

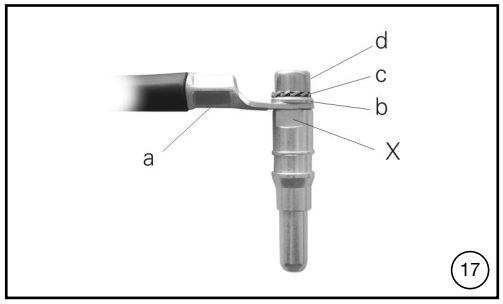

(ill. 17)
与内螺纹 M5、M6、M10 连接：
按所示顺序安装电缆接头 (a)、垫圈 (b)、锁紧垫圈 (c) 和内六角螺钉 M6x12 (d) 或 M5x12 或 M10x20。
用扭矩扳手拧紧内六角螺钉 (d)，并用开口扳手将其固定在位置 X。

最大拧紧扭矩：
M5：
5 N m（2 N m 使用黄铜螺钉）
M6：
8.5 N m（3 N m 使用黄铜螺钉）
M10：
44 N m（10 N m 使用黄铜螺钉）

(ill. 17)
Connection with internal thread M5, M6, M10:
Install the cable lug (a), washer (b), lock washer (c) and hexagon socket-head screw M6x12 (d) or M5x12 or M10x20 in the order shown.
Tighten the hexagon socket-head screw (d) with a torque wrench and secure it with an open-end spanner at pos. X.

Max. tightening torque:
M5:
5 N m (2 N m with brass screws)
M6:
8,5 N m (3 N m with brass screws)
M10:
44 N m (10 N m with brass screws)

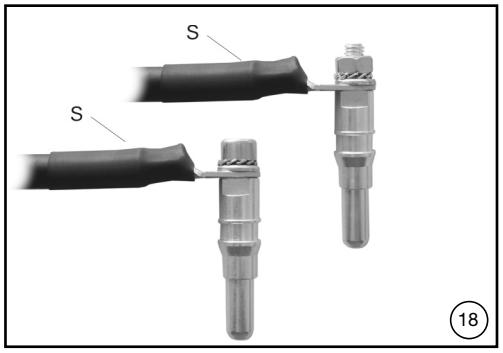

注意事项：
线缆组装后，电缆接头必须用收缩套筒 (S) 绝缘（图 18）。

Note:
After lead assembly, the cable lugs must be insulated with a shrink sleeve (S) (ill. 18).

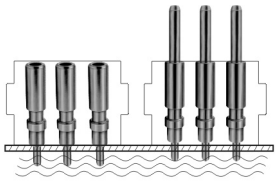

max. 260° C / max. 3 sec

19

钻孔平面图 PCB 触子

公母连接面完全相同

提示：
最高焊接温度：260°C
最长焊接时间：3 秒。
触子支撑块材料对清洗液三氯乙烯耐受。

Drilling plans PCB contacts

Male and female connecting face are identical

Hinweis:
Max. soldering temp.: 260 °C
Max. soldering time: 3 seconds.
Material of contact carrier, is resistant to the cleaning fluid trichloroethylene.

连接面视图

Connecting face view

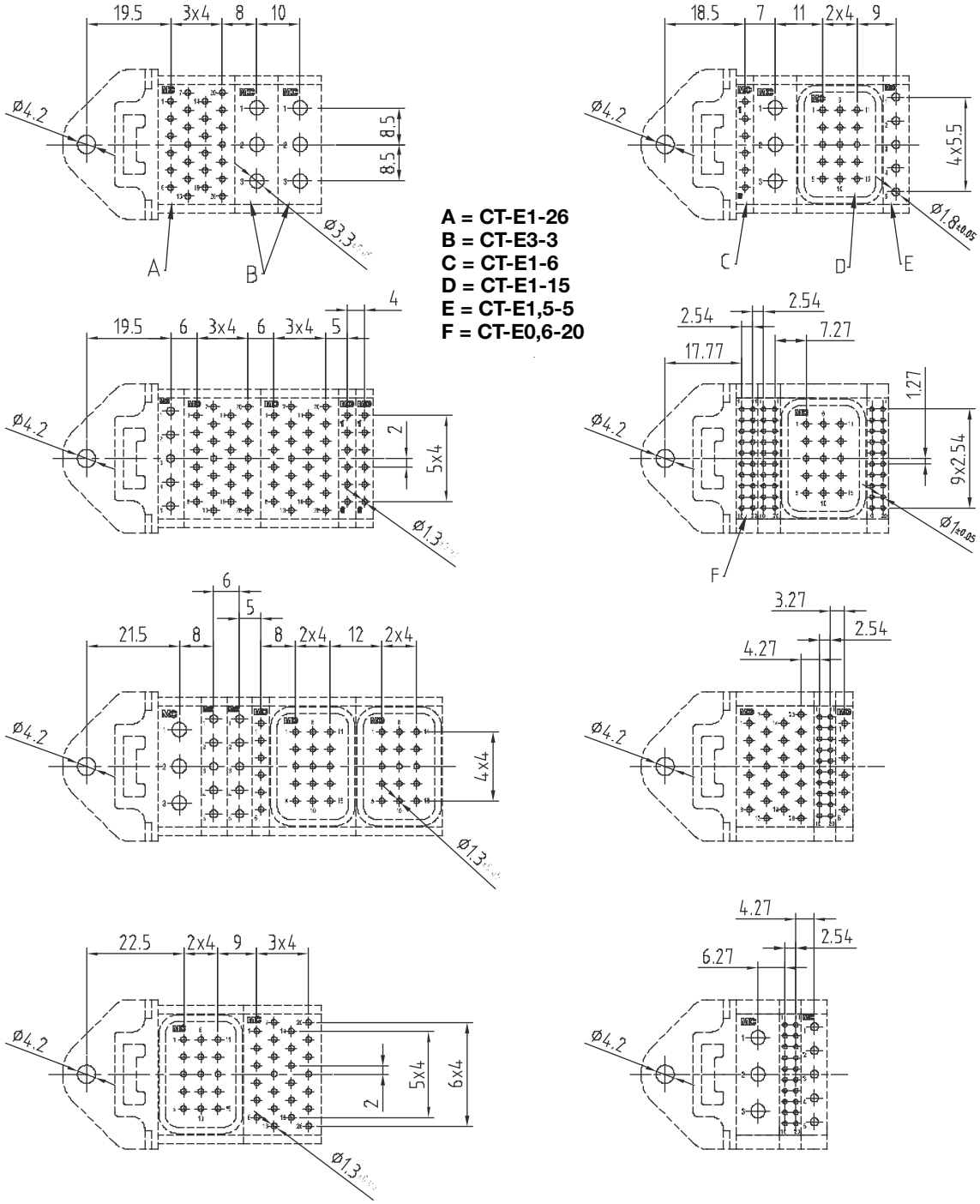

A = CT-E1-26
B = CT-E3-3
C = CT-E1-6
D = CT-E1-15
E = CT-E1,5-5
F = CT-E0,6-20

孔距、公差：±0.1
Distance between holes, tolerance: ±0.1

触子装配

(ill. 20 – 25)
用插入工具将触子（带线缆）插入触子支撑块。可以通过事先用工业酒精润湿触子支撑块，以便于直径为 8 mm 和 6 mm 的触子插入。

提示：
为避免损坏触子支撑块，插入工具必须与轴平行引导。
对于直径为 1 mm 的触子，通过将触子压入，直到插入工具的肩部紧靠触子支撑块，即可获得正确的插入深度。

Contact assembly

(ill. 20 – 25)
Insert the contacts (with connected lead) in the contact carrier by means of the inserting tools. The insertion of the Ø 8 mm and Ø 6 mm contacts can be facilitated by previously wetting the contact carriers with industrial alcohol.

Hinweis:
To avoid damage to the contact carriers, the inserting tools must be guided parallel to the axis.
In the case of the Ø 1 mm contacts the correct insertion depth is obtained by pressing the contacts in until the shoulder of the insertion tool comes up against the contact carrier.

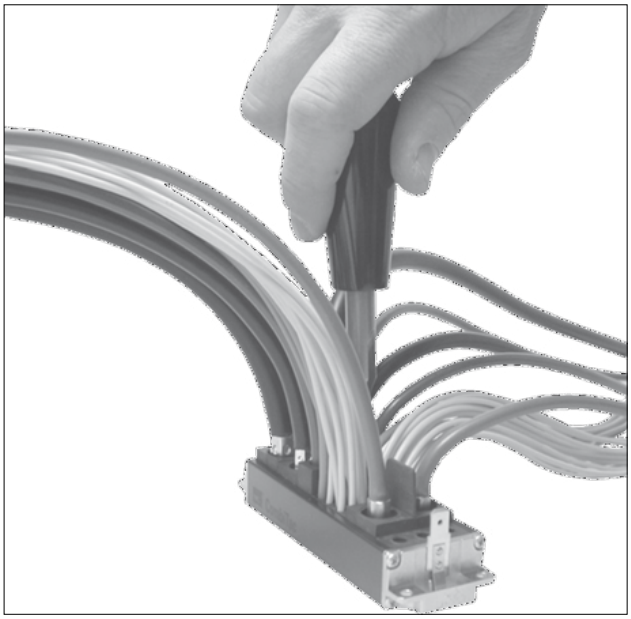

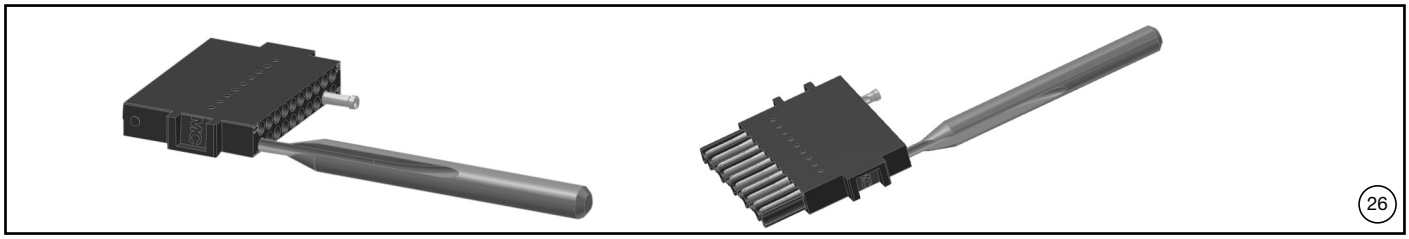

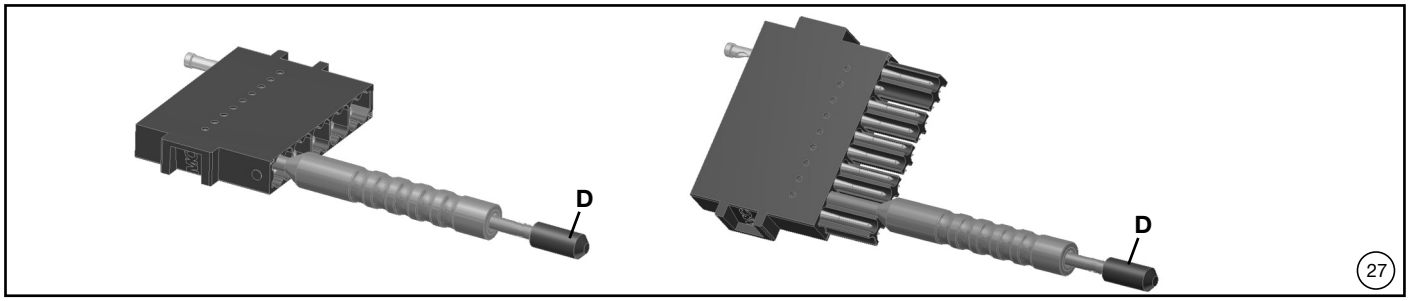

(ill. 26)
安装 CT-0,6
使用插入工具 CT-E-WZ0,6，从编号的背面将触子压入触子压接芯，直至止挡。

(ill. 27)
拆卸 CT-0,6
从正面将拔出工具 CT-A-WZ0,6 插入触子压接芯，直到听到喀哒声。然后，如有必要，推动插针 (D)，从触子支撑块中拔出触子。

注意事项：
为了确保触子稳妥固定在触子支撑块中，触子的拔出次数不得超过 2 次，插入次数不得超过 3 次。

(ill. 26)
Installation CT-0,6
Using the insertion tool CT-E-WZ0,6, press the contacts into the contact inserts from the numbered back side as far as the stop.

(ill. 27)
Removal of CT-0,6
Insert extraction tool CT-A-WZ0,6 into the contact insert from the front until a click is heard. Then, if necessary, push the pin (D) to extract the contact from the contact carrier.

Note:
In order to quarantee a firm fixation of the contacts in the contact carriers, the contacts may not be extracted more than 2 times and inserted more than 3 times.

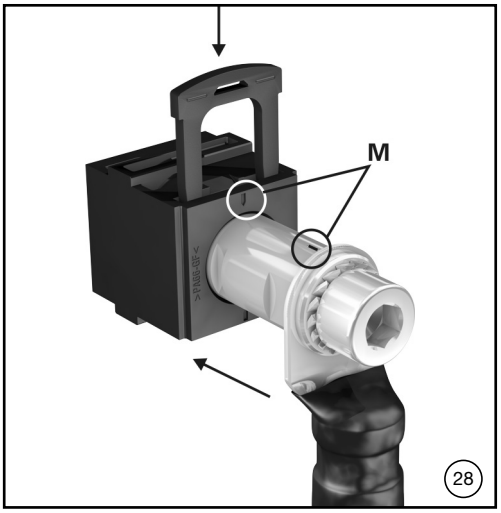

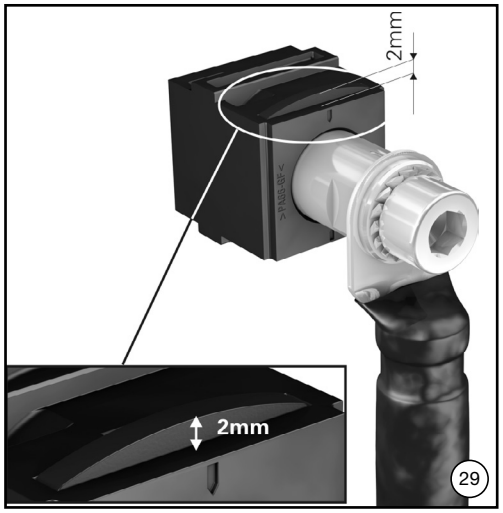

(图 28)
安装带外螺纹的 12 mm 触子时，触子支撑块上的标记与触子上的标记 (M) 必须对齐。然后将触子插入到最终位置，并用固定夹固定（支撑块两侧均可以插入）。当发出咔哒声后即表明完全插入，同时应始终从支撑块的上方插入。

注意事项：
插入状态下的高度：2 mm (图 29)

固定夹可以用商用螺丝刀拆卸 (尺寸 2)。

(ill. 28)
When mounting the 12 mm contact with external thread, the markings (M) on both the contact carrier and the contact must be aligned. The contact is then inserted to the end position and secured with retaining clip (can be inserted in both side). This must engage with an audible click and should always be inserted from above depending on the installation situation.

Note:
Height in inserted condition: 2 mm (ill. 29)

The retaining clip can be removed with a commercial screwdriver (size 2).

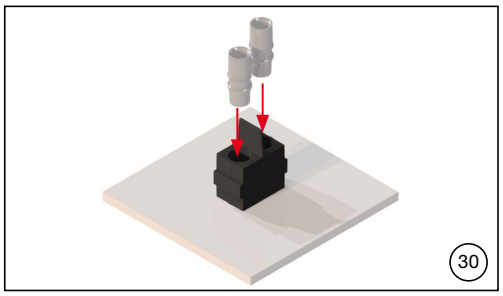

将插座插入触子支撑块 CT-E8-2-IP2X (33.4139)

(ill. 30)
对于插座的组装，请将触子支撑块放在平面上，然后插入插座，或者使用专用工具（图 4）并插入（图 5）。

Insertion of sockets in contact carrier CT-E8-2-IP2X (33.4139)

(ill. 30)
For the assembly of the sockets, place the contact carrier on a flat surface and insert the sockets, or use the special tool (ill. 4) and insert (ill. 5).

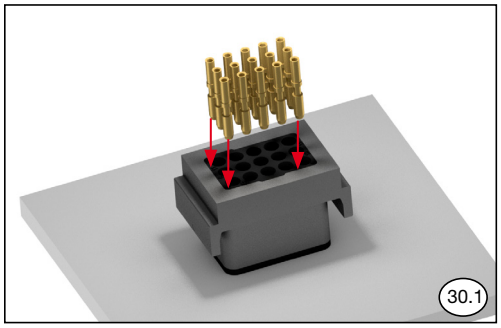

将插座插入触子支撑块 CT-E1-15/B (33.4022)

(ill. 30.1)
对于插座的组装，请将触子支撑块放在平面上，然后插入插座。
专用工具CT-K-WZ（图4）并不适合这些支撑块。

Insertion of sockets in contact carrier CT-E1-15/B (33.4022)

(ill. 30.1)
For the assembly of the sockets, place the contact carrier on a flat surface and insert the sockets.
The special tool (ill. 4) is not suitable for these carriers.

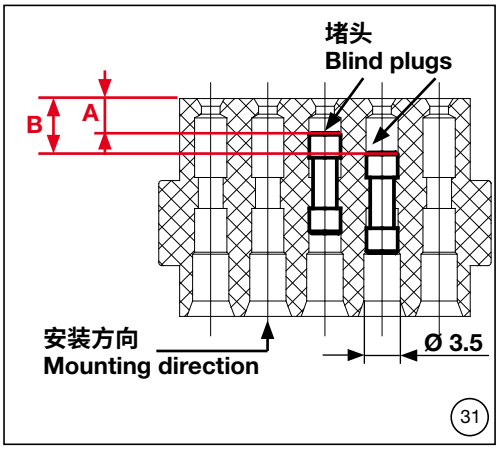

(ill. 31)

堵头装配

Tab. 3

堵头 Blind plugs	Ø	插/拔工具 Insertion/Extraction tool	订货号 Order No.	控制尺寸 Control dimension
				A – B
CT-BS1	1	MSA-WZ1/1,2	18.3002	3.5 mm – 5.1 mm
MVS1	1.5	MSA-WZ1,5	18.3005	3.3 mm – 5.2 mm
MVS3	3	MSA-WZ3	18.3012	7.7 mm – 10.4 mm
MVS3/PE	3	MSA-WZ3	18.3012	6.7 mm – 9.4 mm
MVS5	6	MSA-WZ5	18.3015	7.5 mm – 8.7 mm
CT-BS8	8	MSA-WZ8	18.3022	2 mm

(ill. 31)

Assembly of blind plugs

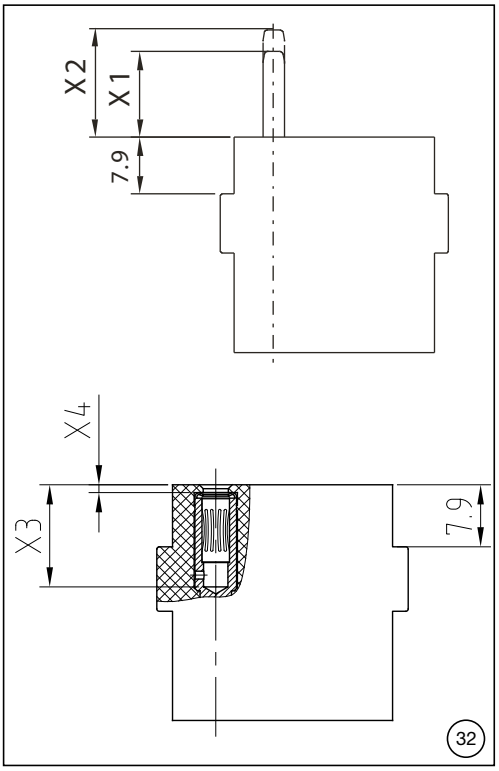

检查触子装配

(ill. 32)
必须检查尺寸 X1（插针）、X2（预插针）和 X3、X4（插座）处的触子是否正确啮合。（参见第 14 页的表 4）。

使用 CT-0.6 时，通过适当工具将触子零件压入到位，就可以将其正确锁定在触子支撑块中。

如果发生插针或插座匹配错误或需要维修的情况，则使用适当的插拔工具，将触子从插接一侧推出触子支撑块，然后重新插入。

Checking the contact assembly

(ill. 32)
The correct engagement of the contacts must be checked with the dimensions X1 (pin), X2 (pin, pre-mating) and X3, X4 (sockets).
(See Tab. 4, page 14).

With the CT-0,6 the contacts are correctly locked in the contact carriers by pressing in the contact parts as far as they will go with the appropriate tool.

In the event of pin or socket assignment errors or repairs the contacts are pushed out of the contact carriers from the plugging side using the appropriate extraction tools and reinserted.

装配后触子的控制尺寸

Control dimensions of assembled contacts

Tab. 4

插针/插座的标称直径 Nom.-Ø pin/socket	插针长度 Pin length	插针长度，预配合 Pin length, premating	PE 插针长度 PE.pin length	插座深度 Socket depth		PE 插座深度 PE socket depth	
	X1	X2	X1	X3	X4	X3	X4
mm	mm	mm	mm	mm	mm	mm	mm
0,6	8.2	-	-	-	2.5	-	-
1	10.4	11.4	-	-	2	-	-
1,5	10.4	12.4	-	-	1.5	-	-
3	12	13	17	14.3	2.3	18	1
6	15	-	21	16.5	-	[1]	-
8	15	-	21	15.6	-	[1]	-
8 (PE-L)	-	-	28	-	-	[1]	-
12	22	-	-	26	-	-	-
热电偶触子 Thermocouple contacts	4.3	-	10.4	[1]	[1]	-	1,5

[1] 与触子支撑块齐平

[1] flush with contact carriers

注意事项/Notes:

注意事项/Notes:

生产商/Producer:
Stäubli Electrical Connectors AG
Stockbrunnenrain 8
4123 Allschwil/Switzerland
Tel. +41 61 306 55 55
Fax +41 61 306 55 56
mail ec.ch@staubli.com
www.staubli.com/electrical

© by Stäubli Electrical Connectors AG, Switzerland – MA213-01 – 01.2025, Index k. Marketing Communications – 随时可能变更/Subject to alterations