FAST MOVING TECHNOLOGY

STÄUBLI

Original MC4

Renewable Energy | Solar Photovoltaics

EN

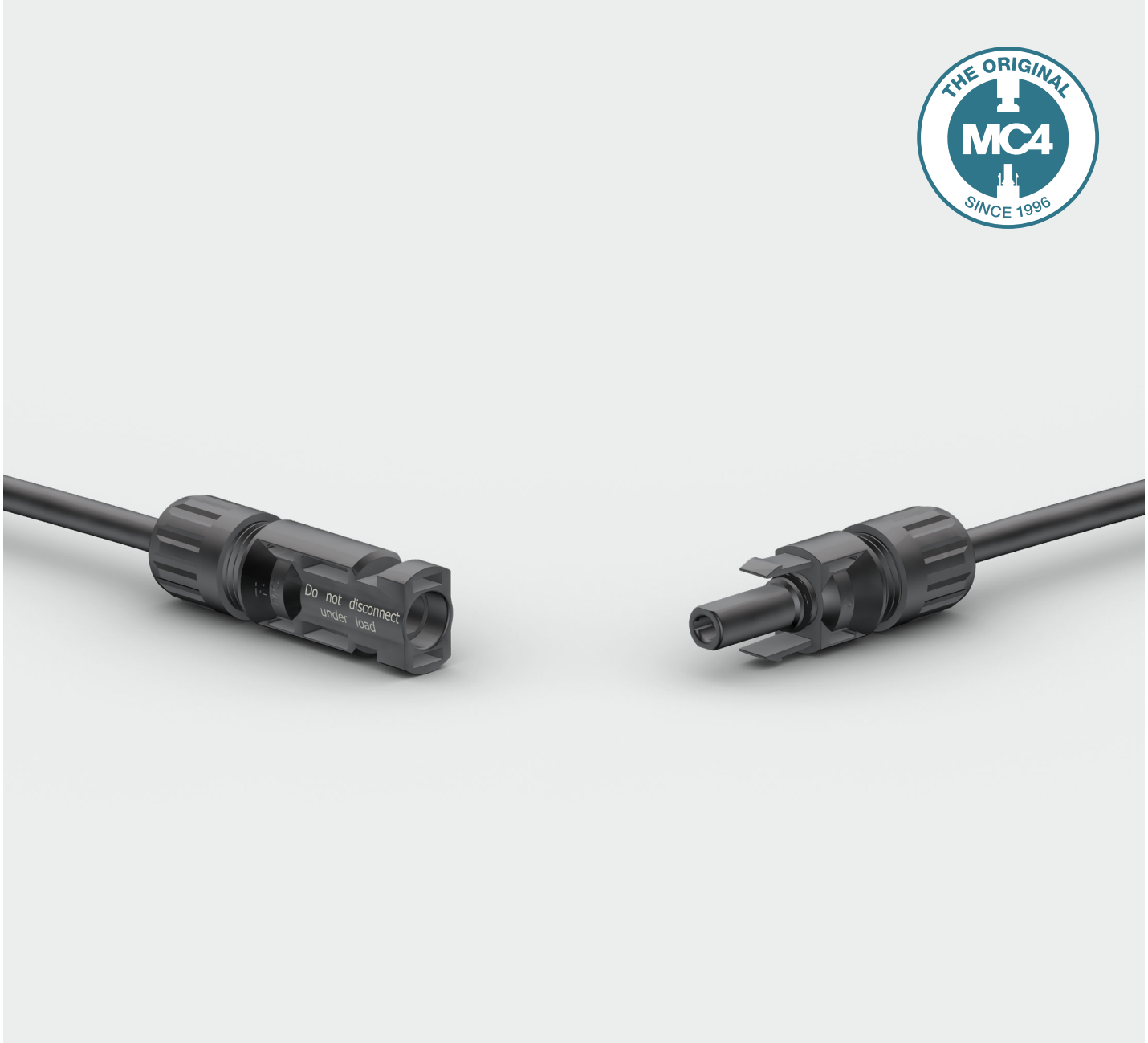

Female and male cable coupler MC4

As individual part with open crimp contact (including insulating part)

Female cable coupler PV-KBT4...

Male cable coupler PV-KST4...

- In accordance with NEC 2023, requires a tool to open.
- Proven MULTILAM technology with high long-term stability, which ensures consistently low performance loss throughout the entire service life of the plug connector.
- Approved for DC 1100 V (IEC)[1] and DC 1500 V (UL).
- Tried and tested plug connectors, over 25 years of experience in the field.
- Available for assembly with cross-sections up to 10 mm².
- Also available as ready made leads according to customer‘s specification.
- To be used with suitable mated connectors from the MC4 product family and suitable lead.

Technical data

Technical data	
Ambient temperature range	-40 °C...+85 °C (TÜV/UL)
Upper limiting temperature	105 °C
Degree of protection, mated	IP65/IP68 (1 m, 1 h)
Degree of protection, unmated	IP2X
Degree of pollution	3
Max. contact resistance of the connector	0.25 mΩ
Rated Impulse Voltage	16 kV
Contact system	MULTILAM
Type of connection	Crimping
Contact material	Copper, tin plated
Insulation material	PC/PA
Locking system	Locking Type
Fire protection class	UL94:V-0
Ammonia resistance (acc. to DLG)	yes
Salt mist spray test, degree of severity 6	yes
TÜV Rheinland certifications number	R 60127190
TÜV Rheinland 2 PfG 2330	R 60087448
UL-File number (UL6703 and CSA C22.2 No. 182.5) (cULus Listed and UL Recognized)	E343181
CQC number of certificate	CQC20024256431
JET number of certificate	B19T0013

[1] The IEC voltage expansion for MC4 cable couplers up to DC 1100 V applies to 2.5 mm², 4.0 mm² and 6.0 mm² cable cross sections used in the end application. However, the 10 mm² cross-section remains at DC 1000 V.

Dimensional drawings

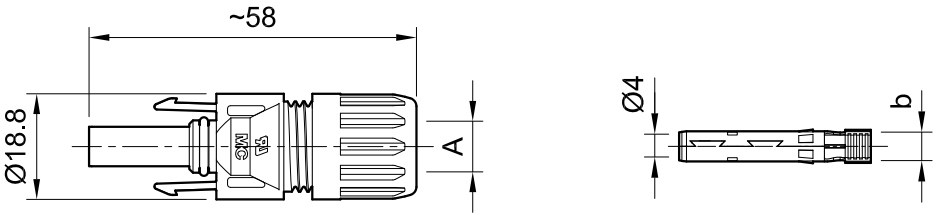

Female cable coupler PV-KBT4...

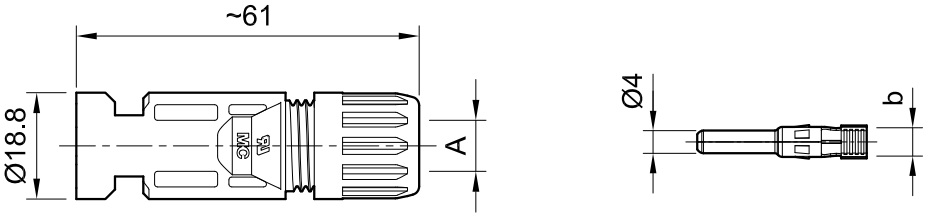

Male cable coupler PV-KST4...

Ordering information

Order No.	Type	Socket	Plug	Outer diameter of cable	Width of crimp opening	IEC 62852			UL 6703			Approvals				
				A (mm)	b (mm)	mm²	DC V	A	AWG	DC V	A	TÜV	cULus	UR	CQC	JET
32.0010P0001-UR	PV-KBT4/2,5I-UR	×		5.0 – 6.0	4.0	2.5	1100	22.5				×	×	×		×
									14	1500	30					
32.0011P0001-UR	PV-KST4/2,5I-UR		×	5.0 – 6.0	4.0	2.5	1100	22.5				×	×	×		×
									14	1500	30					
32.0140P0001-UR	PV-KBT4/2,5X-UR	×		5.5 – 7.4	4.0	2.5	1100	22.5				×	×	×		×
									14	1500	30					
32.0141P0001-UR	PV-KST4/2,5X-UR		×	5.5 – 7.4	4.0	2.5	1100	22.5				×	×	×		×
									14	1500	30					
32.0012P0001-UR	PV-KBT4/2,5II-UR	×		7.0 – 8.8	4.0	2.5	1100	22.5				×	×	×	×	×
									14	1500	30					
32.0013P0001-UR	PV-KST4/2,5II-UR		×	7.0 – 8.8	4.0	2.5	1100	22.5				×	×	×	×	×
									14	1500	30					
32.0014P0001-UR	PV-KBT4/6I-UR	×		5.0 – 6.0	5.8	4	1100	39				×	×	×		×
						6	1100	39								
									12	1500	35					
									10	1500	50					
32.0015P0001-UR	PV-KST4/6I-UR		×	5.0 – 6.0	5.8	4	1100	39				×	×	×		×
						6	1100	39								
									12	1500	35					
									10	1500	50					
32.0142P0001-UR	PV-KBT4/6X-UR	×		5.5 – 7.4	5.8	4	1100	39				×	×	×		×
						6	1100	39								
									12	1500	35					
									10	1500	50					
32.0143P0001-UR	PV-KST4/6X-UR		×	5.5 – 7.4	5.8	4	1100	39				×	×	×		×
						6	1100	39								
									12	1500	35					
									10	1500	50					
32.0016P0001-UR	PV-KBT4/6II-UR	×		7.0 – 8.8	5.8	4	1100	39				×	×	×	×	×
						6	1100	39								
									12	1500	35					
									10	1500	50					

Order No.	Type	Socket	Plug	Outer diameter of cable	Width of crimp opening	IEC 62852			UL 6703			Approvals				
				A (mm)	b (mm)	mm²	DC V	A	AWG	DC V	A	TÜV	cULus	UR	CQC	JET
32.0017P0001-UR	PV-KST4/6II-UR		×	7.0 – 8.8	5.8	4	1100	39				×	×	×	×	×
						6	1100	39								
									12	1500	35					
									10	1500	50					
32.0034P0001	PV-KBT4/10II	×		7.0 – 8.8	6.5	10	1000	45				×				×
32.0035P0001	PV-KST4/10II		×	7.0 – 8.8	6.5	10	1000	45				×				×

Note:
For more detailed information concerning the suitable cable gland range, please consult corresponding assembly instructions (see “Further information”).

Note:
Unmated connectors must be protected from any contamination using Stäubli sealing caps. For ordering information concerning Stäubli sealing caps, please consult corresponding catalog (see “Further information”).

Further information

Female and male cable coupler with barrel crimp contacts

For cable coupler with barrel crimp contacts, please consult:
www.staubli.com/re-downloads.html ➞ English ➞ Catalog ➞ **Cable coupler with barrel crimp contacts**

Tools and accessories

For related Stäubli tools and accessories please consult:
www.staubli.com/re-downloads.html ➞ English ➞ Catalog ➞ **Tools and accessories**

Assembly instructions

For assembly instructions for “Female and male cable coupler MC4” please consult:
www.staubli.com/re-downloads.html ➞ English ➞ Assembly info ➞ **MA231**

Female and male cable coupler MC4

Open crimp contacts on carrier band (including insulating part)

Female cable coupler PV-KBT4...

Male cable coupler PV-KST4...

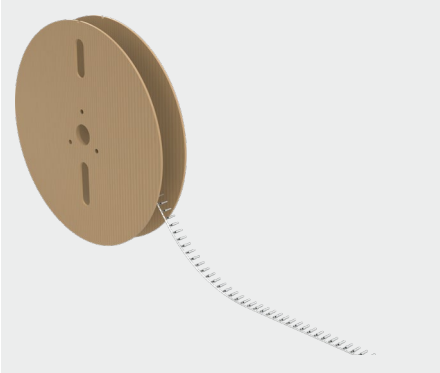

Reel with contacts

- In accordance with NEC 2023, requires a tool to open.
- Proven MULTILAM technology with high long-term stability, which ensures consistently low performance loss throughout the entire service life of the plug connector.
- Approved for DC 1100 V (IEC)[1] and DC 1500 V (UL).
- Tried and tested plug connectors, over 25 years of experience in the field.
- Available for assembly with cross-sections up to 10 mm².
- To be used with suitable mated connectors from the MC4 product family and suitable lead.
- Also available as ready made leads according to customer‘s specification.

Technical data

Technical data	
Ambient temperature range	-40 °C...+85 °C (TÜV/UL)
Upper limiting temperature	105 °C
Degree of protection, mated	IP65/IP68 (1 m, 1 h)
Degree of protection, unmated	IP2X
Degree of pollution	3
Max. contact resistance of the connector	0.25 mΩ
Rated Impulse Voltage	16 kV
Contact system	MULTILAM

[1] The IEC voltage expansion for MC4 cable couplers up to DC 1100 V applies to 2.5 mm², 4.0 mm² and 6.0 mm² cable cross sections used in the end application. However, the 10 mm² cross-section remains at DC 1000 V.

Technical data	
Type of connection	Crimping
Contact material	Copper, tin plated
Insulation material	PC/PA
Locking system	Locking Type
Fire protection class	UL94:V-0
Ammonia resistance (acc. to DLG)	yes
Salt mist spray test, degree of severity 6	yes
TÜV Rheinland certifications number	R 60127190
TÜV Rheinland 2 PfG 2330	R 60087448
UL-File number (UL6703 and CSA C22.2 No. 182.5) (cULus Listed and UL Recognized)	E343181
CQC number of certificate	CQC20024256431
JET number of certificate	B19T0013

Dimensional drawings

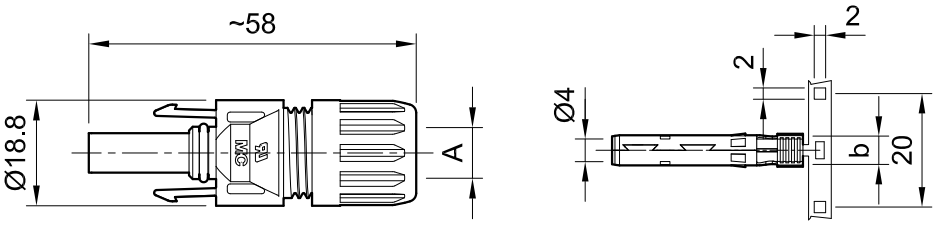

Female cable coupler PV-KBT4...

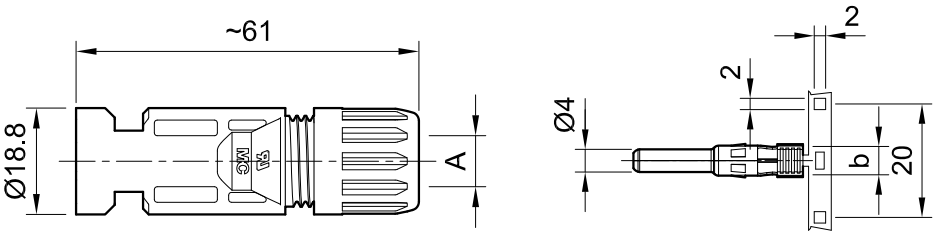

Male cable coupler PV-KST4...

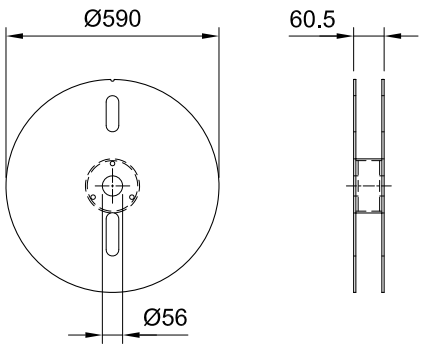

Reel with contacts

Ordering information

Order No.	Type	Socket	Plug	Outer diameter of cable	Width of crimp opening	IEC 62852			UL 6703			Contacts per reel	Approvals				
				A (mm)	b (mm)	mm²	DC V	A	AWG	DC V	A		TÜV	cULus	UR	CQC	JET
32.0010P2000-UR	PV-KBT4/2,5I-UR	×		5.0 – 6.0	4.0	2.5	1100	22.5				2000	×	×	×		×
									14	1500	30						
32.0011P2000-UR	PV-KST4/2,5I-UR		×	5.0 – 6.0	4.0	2.5	1100	22.5				2000	×	×	×		×
									14	1500	30						
32.0140P2000-UR	PV-KBT4/2,5X-UR	×		5.5 – 7.4	4.0	2.5	1100	22.5				2000	×	×	×		×
									14	1500	30						
32.0141P2000-UR	PV-KST4/2,5X-UR		×	5.5 – 7.4	4.0	2.5	1100	22.5				2000	×	×	×		×
									14	1500	30						
32.0012P2000-UR	PV-KBT4/2,5II-UR	×		7.0 – 8.8	4.0	2.5	1100	22.5				2000	×	×	×	×	×
									14	1500	30						
32.0013P2000-UR	PV-KST4/2,5II-UR		×	7.0 – 8.8	4.0	2.5	1100	22.5				2000	×	×	×	×	×
									14	1500	30						
32.0014P2000-UR	PV-KBT4/6I-UR	×		5.0 – 6.0	5.8	4	1100	39				2000	×	×	×		×
						6	1100	39									
									12	1500	35						
									10	1500	50						
32.0015P2000-UR	PV-KST4/6I-UR		×	5.0 – 6.0	5.8	4	1100	39				2000	×	×	×		×
						6	1100	39									
									12	1500	35						
									10	1500	50						
32.0142P2000-UR	PV-KBT4/6X-UR	×		5.5 – 7.4	5.8	4	1100	39				2000	×	×	×		×
						6	1100	39									
									12	1500	35						
									10	1500	50						
32.0143P2000-UR	PV-KST4/6X-UR		×	5.5 – 7.4	5.8	4	1100	39				2000	×	×	×		×
						6	1100	39									
									12	1500	35						
									10	1500	50						
32.0016P2000-UR	PV-KBT4/6II-UR	×		7.0 – 8.8	5.8	4	1100	39				2000	×	×	×	×	×
						6	1100	39									
									12	1500	35						
									10	1500	50						

Order No.	Type	Socket	Plug	Outer diameter of cable	Width of crimp opening	IEC 62852			UL 6703			Contacts per reel	Approvals				
				A (mm)	b (mm)	mm²	DC V	A	AWG	DC V	A		TÜV	cULus	UR	CQC	JET
32.0017P2000-UR	PV-KST4/6II-UR		×	7.0 – 8,8	5.8	4	1100	39				2000	×	×	×	×	×
						6	1100	39									
									12	1500	35						
									10	1500	50						
32.0034P1500	PV-KBT4/10II	×		7.0 – 8,8	6.5	10	1000	45				1500	×				×
32.0035P1500	PV-KST4/10II		×	7.0 – 8,8	6.5	10	1000	45				1500	×				×

Note:

For more detailed information concerning the suitable cable gland range, please consult corresponding assembly instructions (see “Further information”).

Note:

Unmated connectors must be protected from any contamination using Stäubli sealing caps. For ordering information concerning Stäubli sealing caps, please consult corresponding catalog (see “Further information”).

Further information

Tools and accessories

For related Stäubli tools and accessories please consult:
www.staubli.com/re-downloads.html ➞ English ➞ Catalog ➞ **Tools and accessories**

Assembly instructions

For assembly instructions for “Female and male cable coupler MC4” please consult:
www.staubli.com/re-downloads.html ➞ English ➞ Assembly info ➞ **MA231**

Female and male panel receptacle MC4

As individual part (including insulating part)

Female panel receptacle PV-ADBP4-S2...

Male panel receptacle PV-ADSP4-S2...

- MC4 panel-receptacle connectors are the interface between an inverter or junction box or junction and a branch cable.
- Mounting directly by means of screw thread or in perforated plate with plastic nut (included in delivery).
- Rapid, precise plugging.
- Protection class (IP65 and IP68) guarantees a high level of tightness.
- To be used with suitable mated connectors from the MC4 product family and suitable lead.
- Includes sealing element for enclosure.

Technical data

Technical data	
Ambient temperature range	-40 °C...+85 °C (TÜV/UL)
Upper limiting temperature	105 °C
Degree of protection, mated	IP65/IP68 (1 m, 1 h)
Degree of protection, unmated	IP2X
Degree of pollution	3
Max. contact resistance of the connector	0.25 mΩ
Rated Impulse Voltage	16 kV
Contact system	MULTILAM
Type of connection	Crimping
Contact material	Copper, tin plated
Insulation material	PC/PA
Locking system	Locking Type
Fire protection class	UL94:V-0
TÜV Rheinland certifications number	R 60127181
UL-File number	E343181

Dimensional drawings

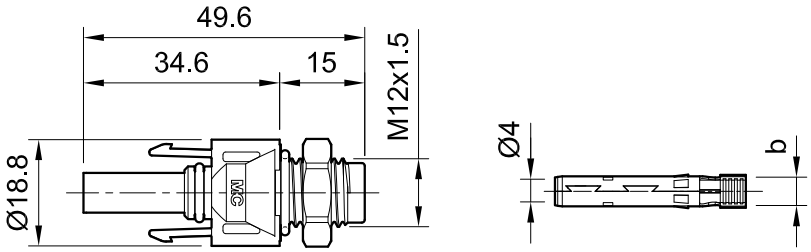

Female panel receptacle PV-ADBP4-S2...

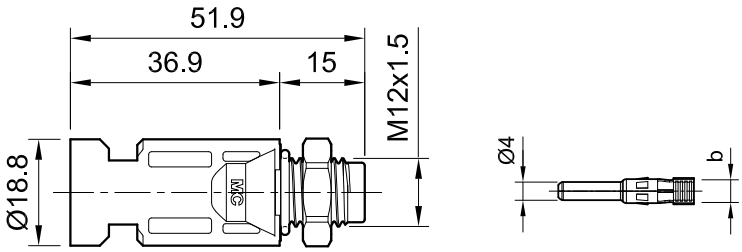

Male panel receptacle PV-ADSP4-S2...

Ordering information

Order No.	Type	Socket	Plug	Width of crimp opening	IEC 62852			UL 6703			Approvals	
				b (mm)	mm²	DC V	A	AWG	DC V	A	TÜV	UR
32.0076P0001-UR	PV-ADBP4-S2-UR/2,5	×		4.0	1.5	1250	17.5				×	×
					2.5	1250	22.5					
								14	1500	30		
32.0077P0001-UR	PV-ADSP4-S2-UR/2,5		×	4.0	1.5	1250	17.5				×	×
					2.5	1250	22.5					
								14	1500	30		
32.0078P0001-UR	PV-ADBP4-S2-UR/6	×		5.8	4	1250	39				×	×
					6	1250	45					
								12	1500	35		
								10	1500	50		
32.0079P0001-UR	PV-ADSP4-S2-UR/6		×	5.8	4	1250	39				×	×
					6	1250	45					
								12	1500	35		
								10	1500	50		
32.0150P0001	PV-ADBP4-S2/10	×		6.5	10	1250	51				×	
32.0151P0001	PV-ADSP4-S2/10		×	6.5	10	1250	51				×	

Note:
For more detailed information concerning the suitable cable gland range, please consult corresponding assembly instructions (see “Further information”).

Note:
Unmated connectors must be protected from any contamination using Stäubli sealing caps. For ordering information concerning Stäubli sealing caps, please consult corresponding catalog (see “Further information”).

Further information

Tools and accessories

For related Stäubli tools and accessories please consult:
www.staubli.com/re-downloads.html ➞ English ➞ Catalog ➞ **Tools and accessories**

Assembly instructions

For assembly instructions for “Female and male panel receptacle MC4” please consult:
www.staubli.com/re-downloads.html ➞ English ➞ Assembly info ➞ **MA275**

Female and male panel receptacle MC4

Open crimp contacts on carrier band (including insulating part)

Female panel receptacle PV-ADBP4-S2...

Male panel receptacle PV-ADSP4-S2...

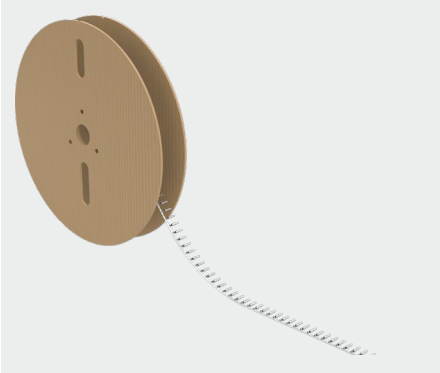

Reel with contacts

- MC4 panel-receptacle connectors are the interface between an inverter or junction box or junction and a branch cable.
- Mounting directly by means of screw thread or in perforated plate with plastic nut (included in delivery).
- Rapid, precise plugging.
- Protection class (IP65 and IP68) guarantees a high level of tightness.
- To be used with suitable mated connectors from the MC4 product family and suitable lead.
- Includes sealing element for enclosure.

Technical data

Technical data	
Ambient temperature range	-40 °C...+85 °C
Upper limiting temperature	105 °C
Degree of protection, mated	IP65/IP68 (1 m, 1 h)
Degree of protection, unmated	IP2X
Degree of pollution	3
Max. contact resistance of the connector	0.25 mΩ
Rated Impulse Voltage	16 kV
Contact system	MULTILAM
Type of connection	Crimping
Contact material	Copper, tin plated
Insulation material	PC/PA

Technical data	
Locking system	Locking Type
Fire protection class	UL94:V-0
TÜV Rheinland certifications number	R 60127181
UL-File number	E343181

Dimensional drawings

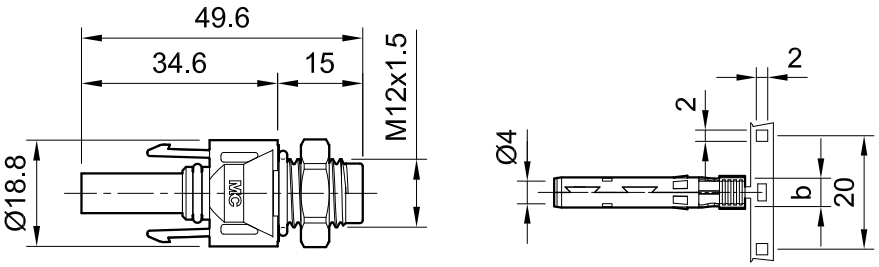

Female panel receptacle PV-ADBP4-S2...

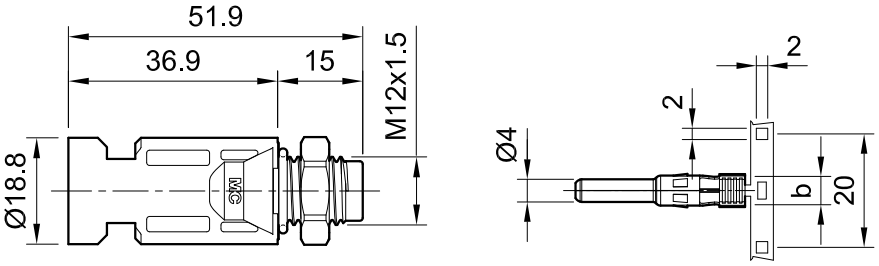

Male panel receptacle PV-ADSP4-S2...

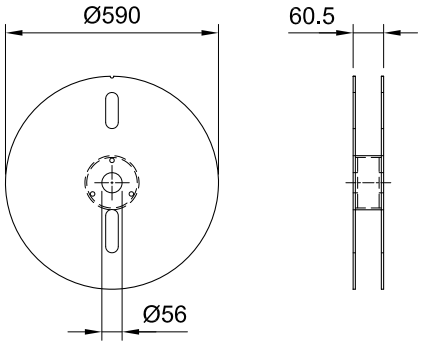

Reel with contacts

Ordering information

Order No.	Type	Socket	Plug	Width of crimp opening	IEC 62852			UL 6703			Contacts per reel	Approvals	
				b (mm)	mm²	DC V	A	AWG	DC V	A		TÜV	UR
32.0076P2000-UR	PV-ADBP4-S2-UR/2,5	×		4.0	1.5	1250	17.5				2000	×	×
					2.5	1250	22.5						
								14	1500	30			
32.0077P2000-UR	PV-ADSP4-S2-UR/2,5		×	4.0	1.5	1250	17.5				2000	×	×
					2.5	1250	22.5						
								14	1500	30			
32.0078P2000-UR	PV-ADBP4-S2-UR/6	×		5.8	4	1250	39				2000	×	×
					6	1250	45						
								12	1500	35			
								10	1500	50			
32.0079P2000-UR	PV-ADSP4-S2-UR/6		×	5.8	4	1250	39				2000	×	×
					6	1250	45						
								12	1500	35			
								10	1500	50			
32.0150P1500	PV-ADBP4-S2/10	×		6.5	10	1250	51				1500	×	
32.0151P1500	PV-ADSP4-S2/10		×	6.5	10	1250	51				1500	×	

Further information

Tools and accessories

For related Stäubli tools and accessories please consult:
www.staubli.com/re-downloads.html ➞ English ➞ Catalog ➞ **Tools and accessories**

Assembly instructions

For assembly instructions for “Female and male panel receptacle MC4” please consult:
www.staubli.com/re-downloads.html ➞ English ➞ Assembly info ➞ **MA275**

● Stäubli Units ○ Representatives/Agents

Global presence of the Stäubli Group

www.staubli.com

Staubli is a trademark of Stäubli International AG, registered in Switzerland and other countries.
We reserve the right to modify product specifications without prior notice. © Stäubli 2025.
ec.marcom@staubli.com | Photo credits: Stäubli , ISO (CC BY-SA 3.0)

PV Sol Original MC4 11014112-en G 05.2025